WARNING!

FOR USE OF AUTHORIZED TECHNICAL PERSONNEL ONLY

Visit us online to order parts for this machine:
https://parts4equipment.com/

ACCU 5400

SPARE PARTS EXPLODED DRAWINGS

Visit us online to order parts for this machine:
https://parts4equipment.com/

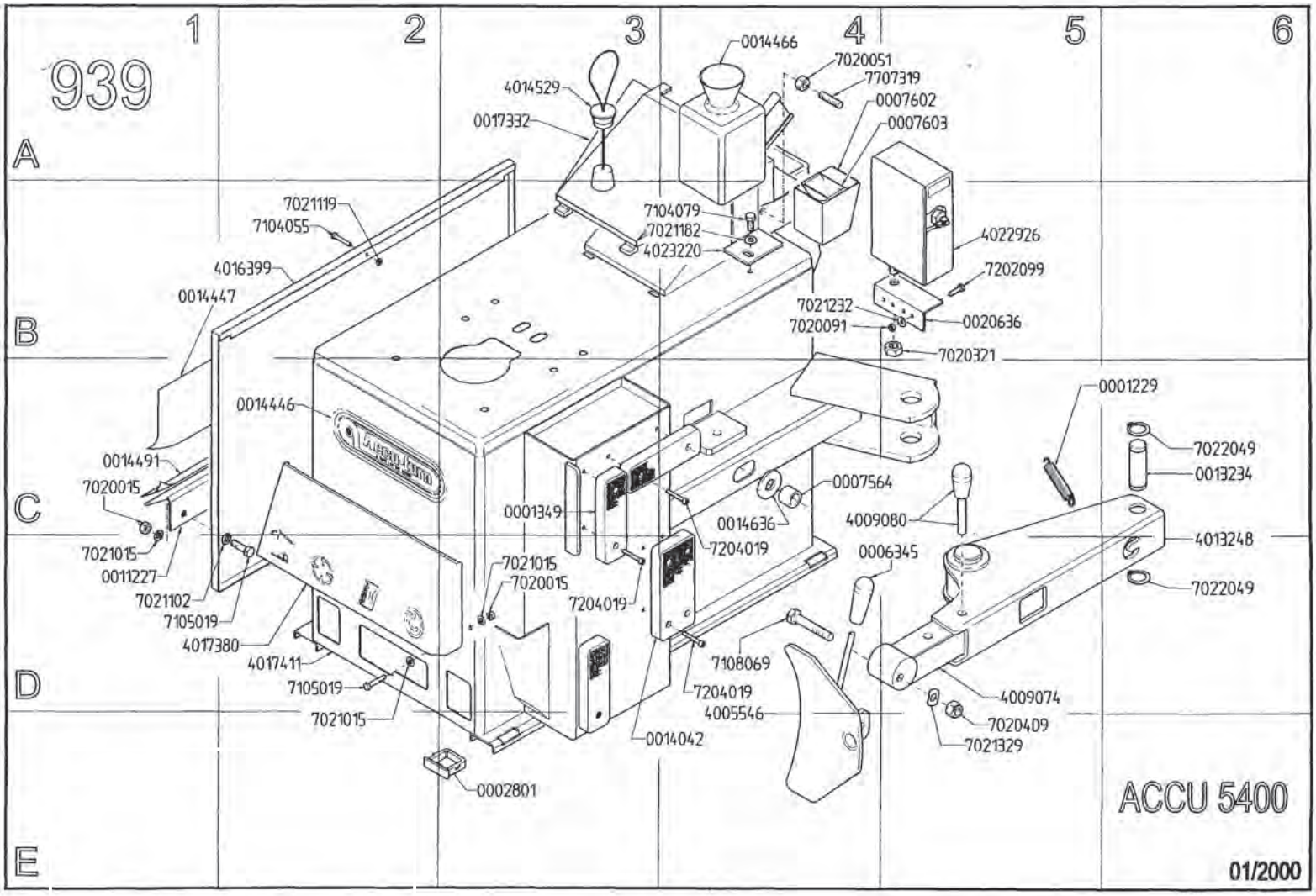

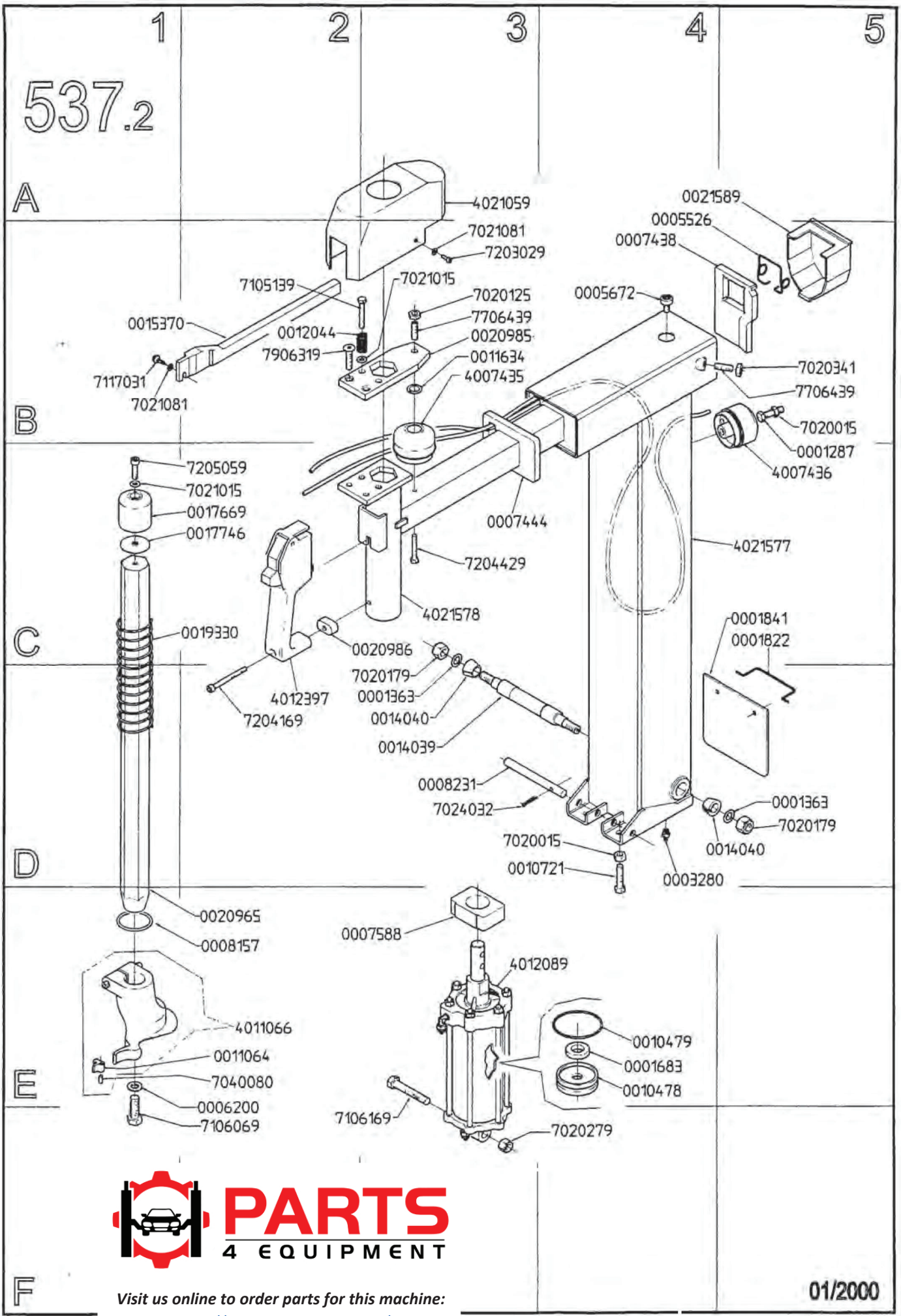

PARTS 4 EQUIPMENT

Visit us online to order parts for this machine:
https://parts4equipment.com/

PARTS 4 EQUIPMENT

Visit us online to order parts for this machine:
https://parts4equipment.com/

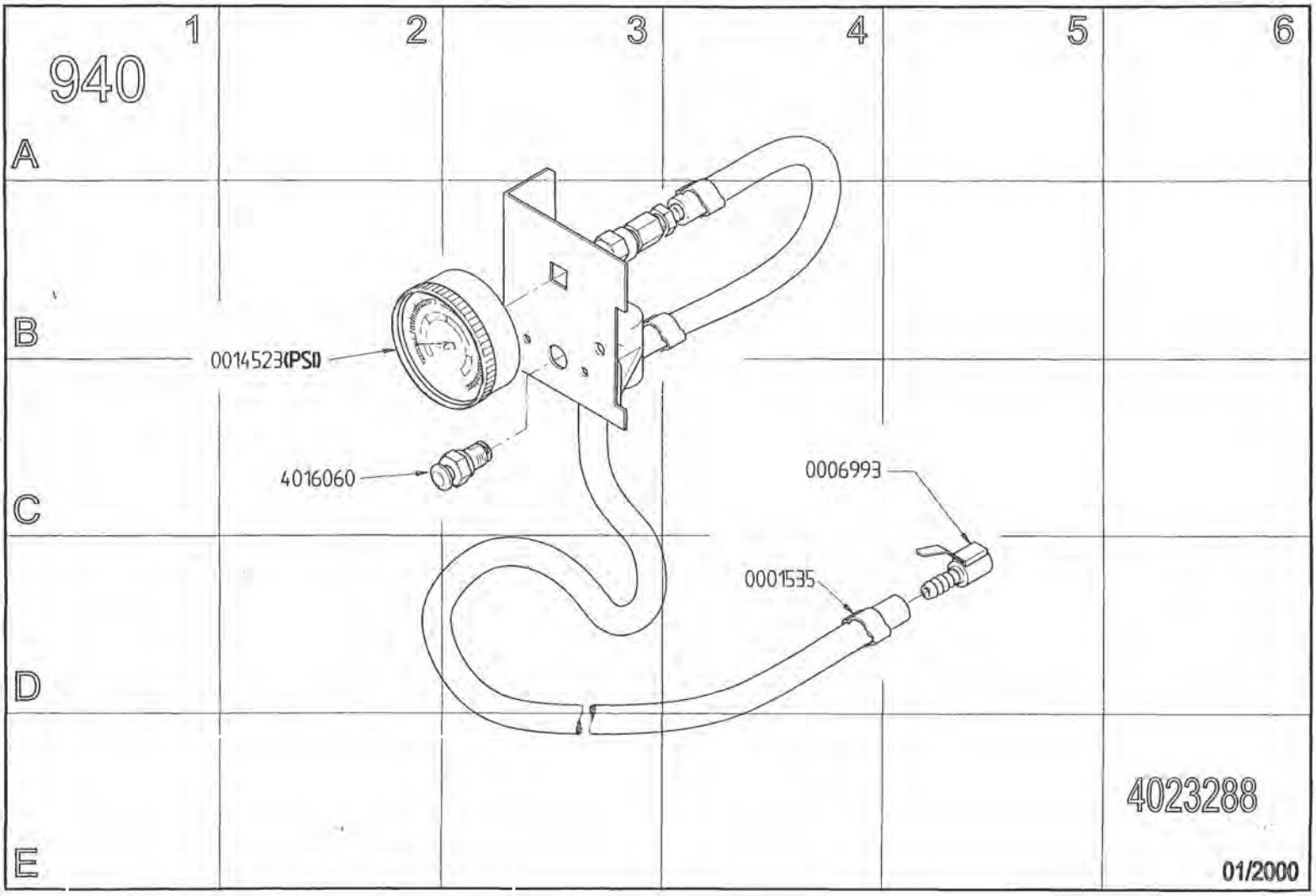

Visit us online to order parts for this machine:
https://parts4equipment.com/

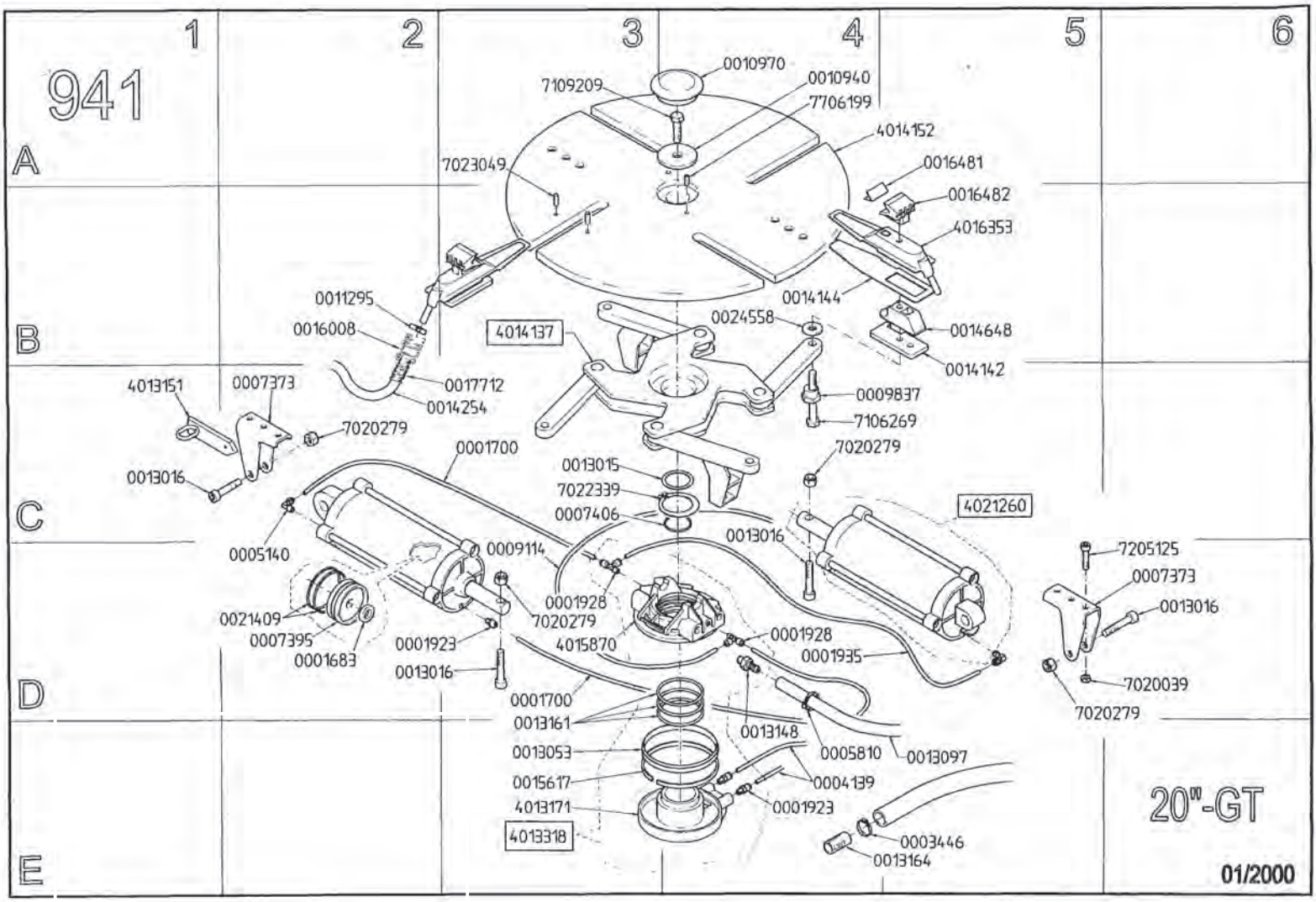

PARTS 4 EQUIPMENT

Visit us online to order parts for this machine:
https://parts4equipment.com/

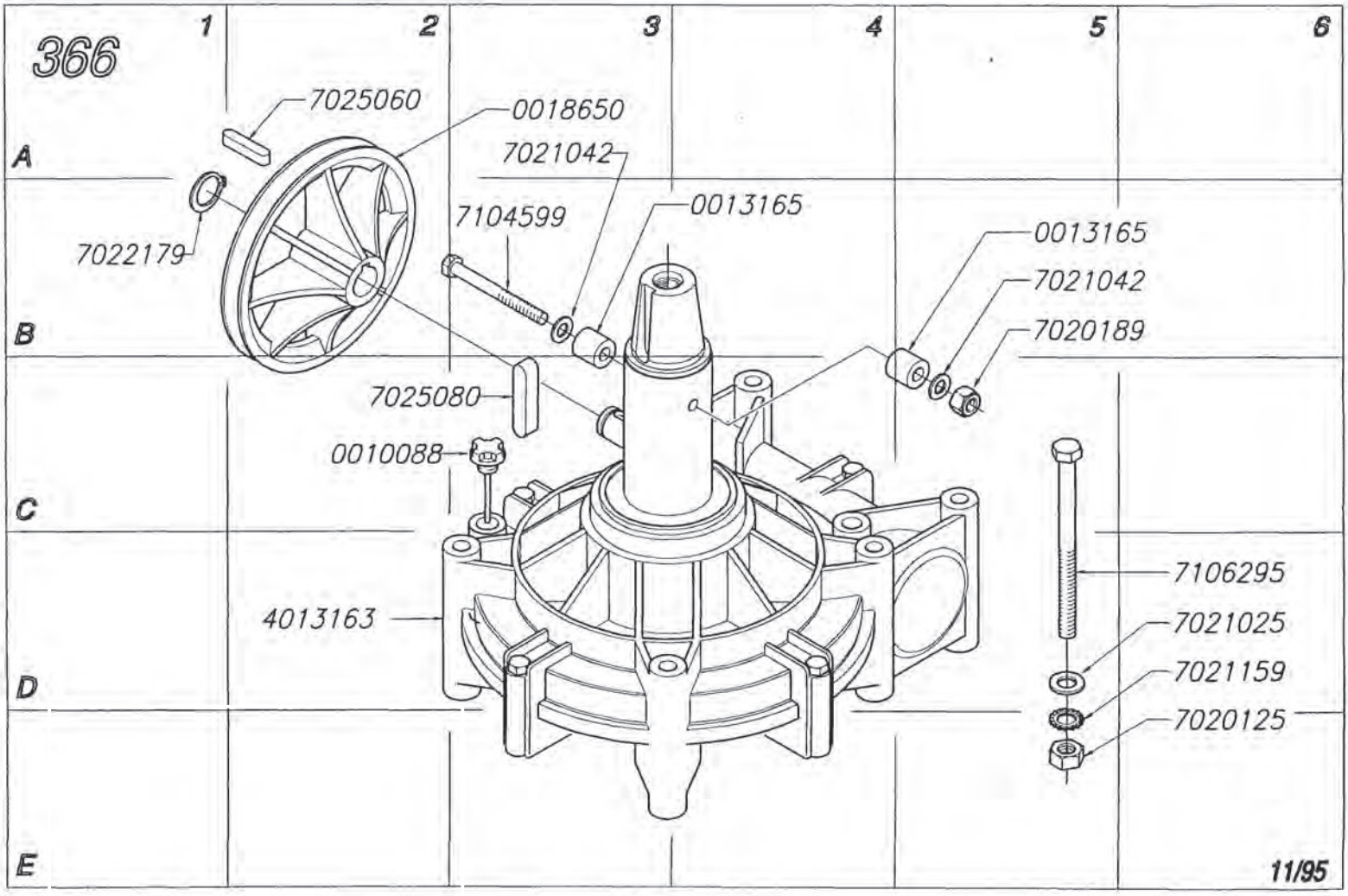

Visit us online to order parts for this machine:
https://parts4equipment.com/

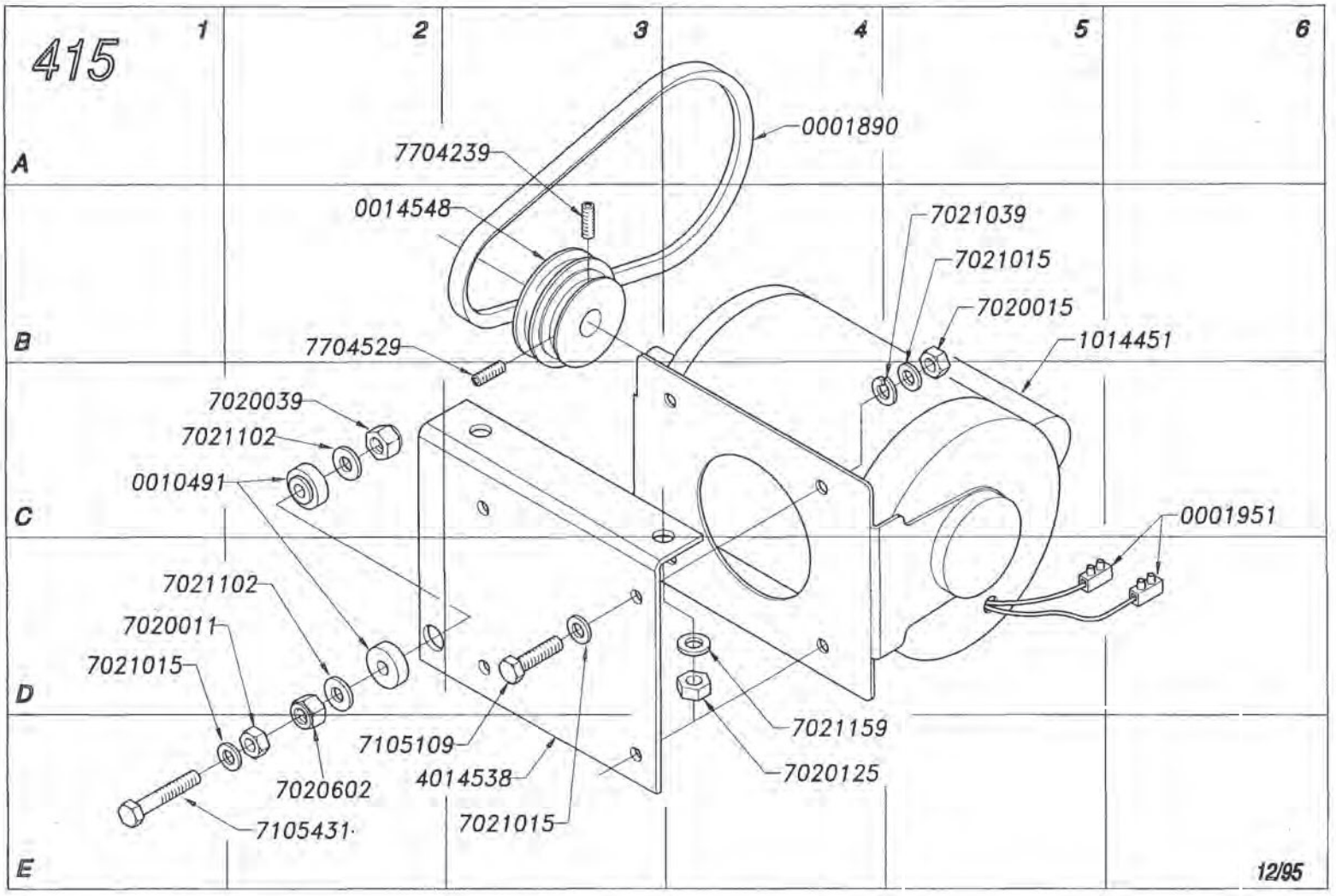

PARTS 4 EQUIPMENT

Visit us online to order parts for this machine:
https://parts4equipment.com/

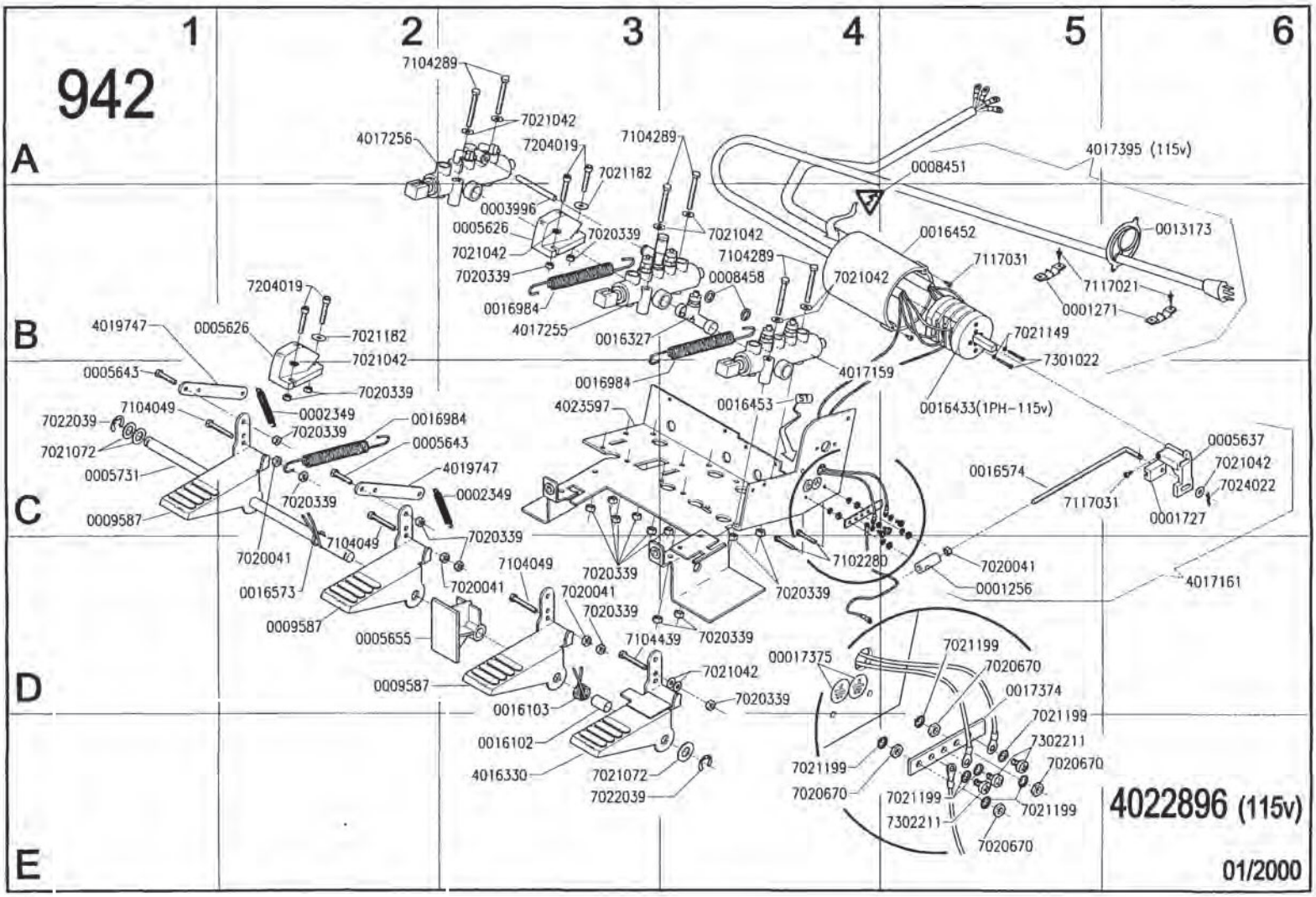

PARTS 4 EQUIPMENT

Visit us online to order parts for this machine:
https://parts4equipment.com/

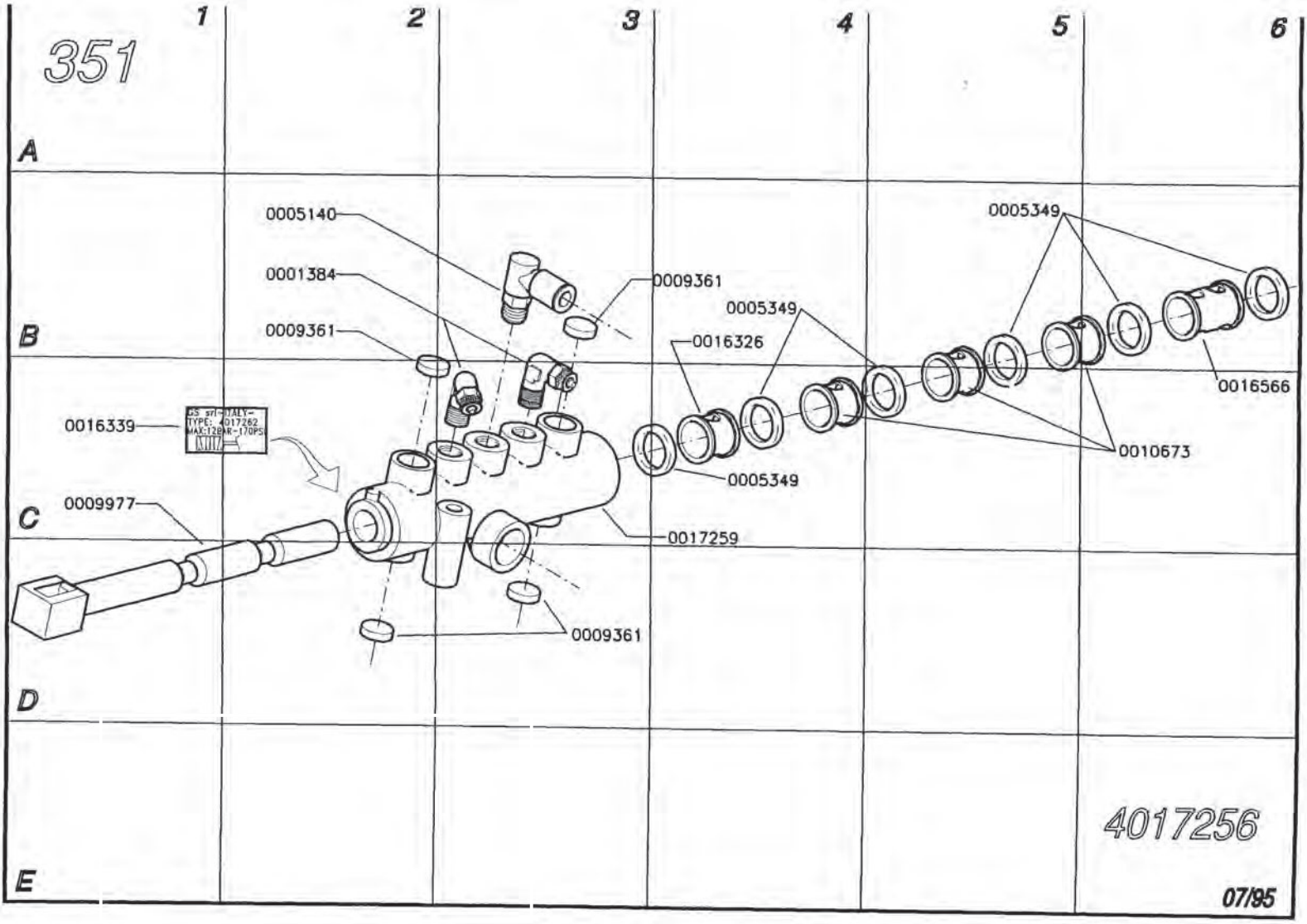

PARTS 4 EQUIPMENT

Visit us online to order parts for this machine:
https://parts4equipment.com/

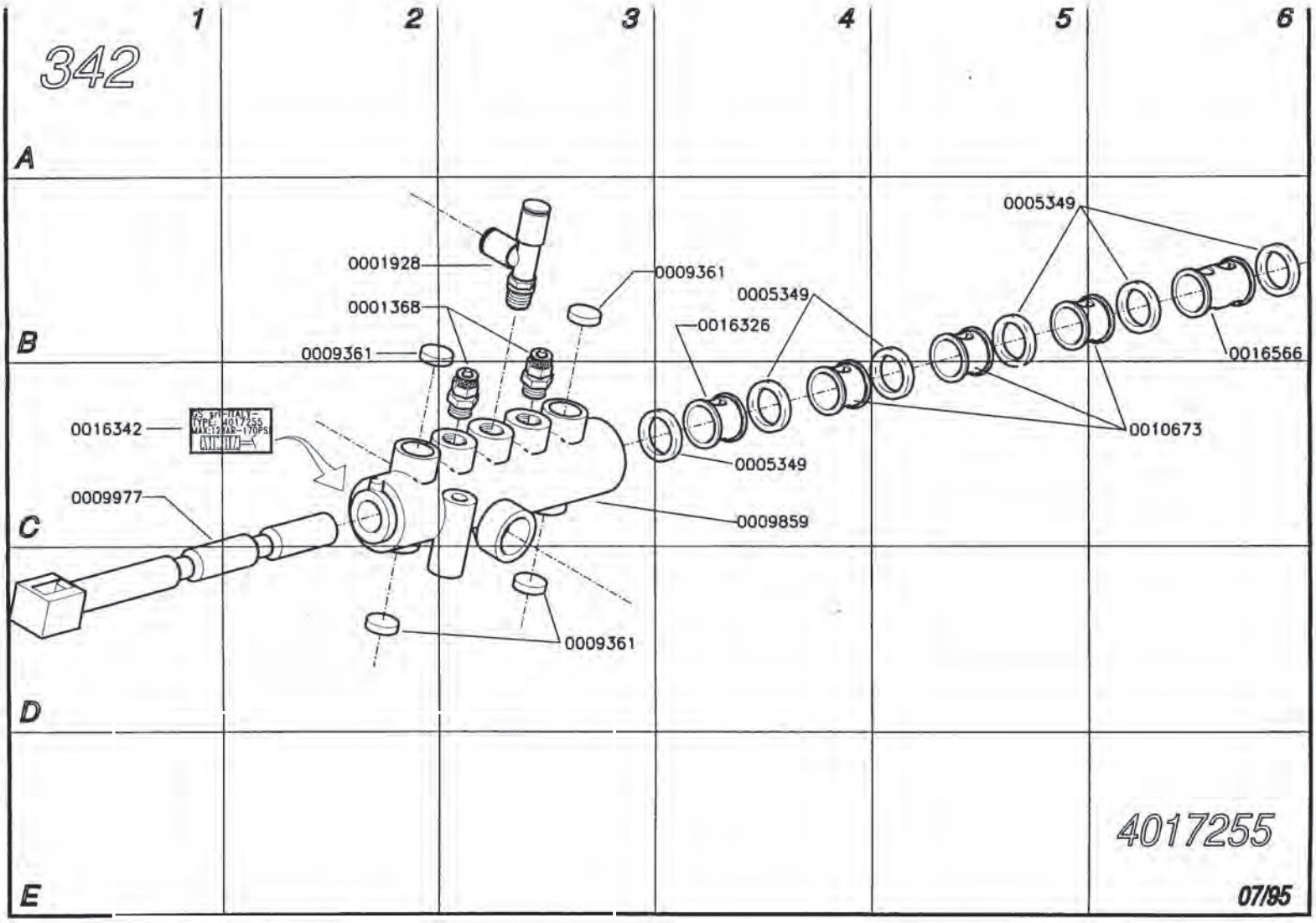

PARTS 4 EQUIPMENT

Visit us online to order parts for this machine:
https://parts4equipment.com/

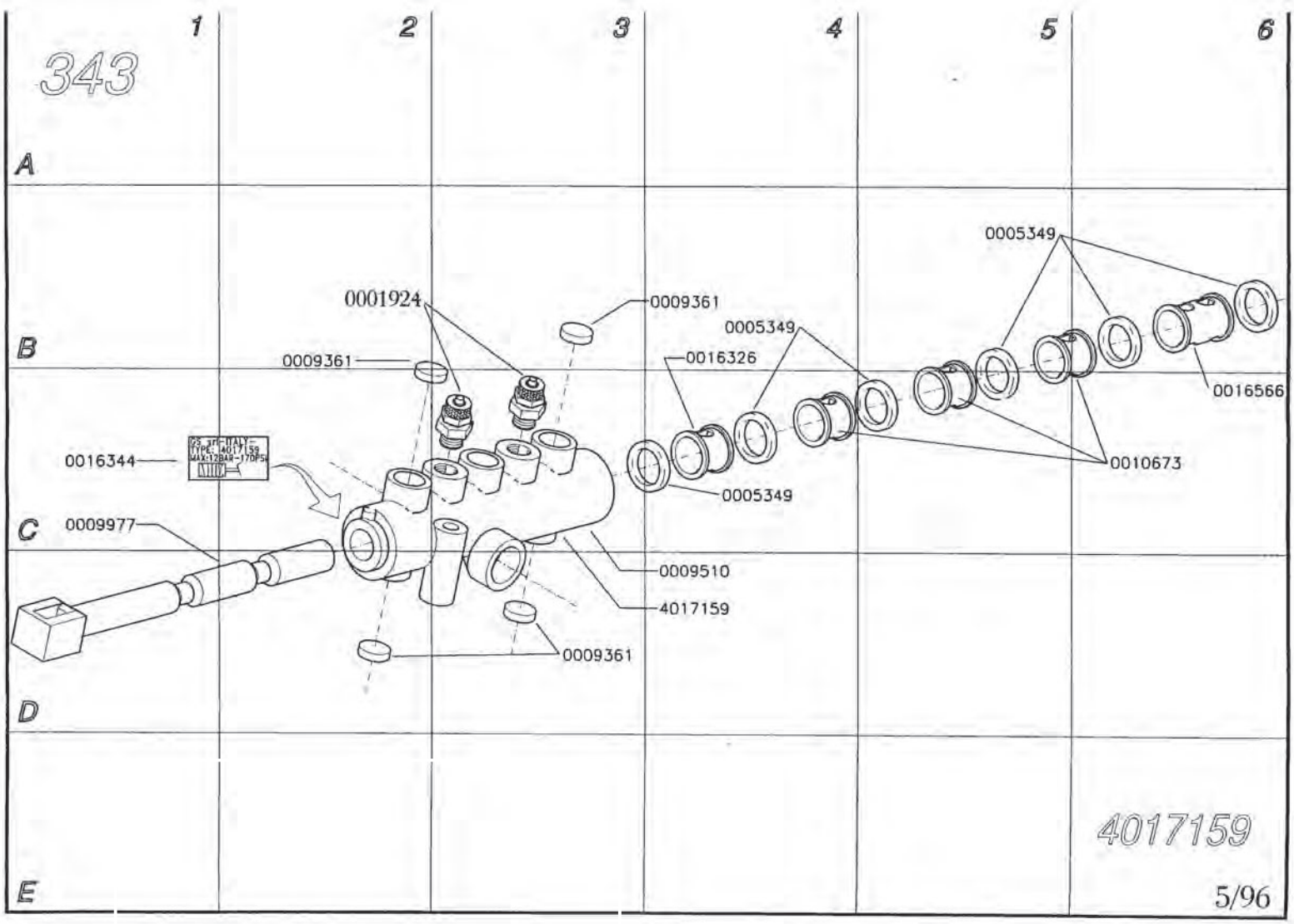

PARTS 4 EQUIPMENT

Visit us online to order parts for this machine:
https://parts4equipment.com/

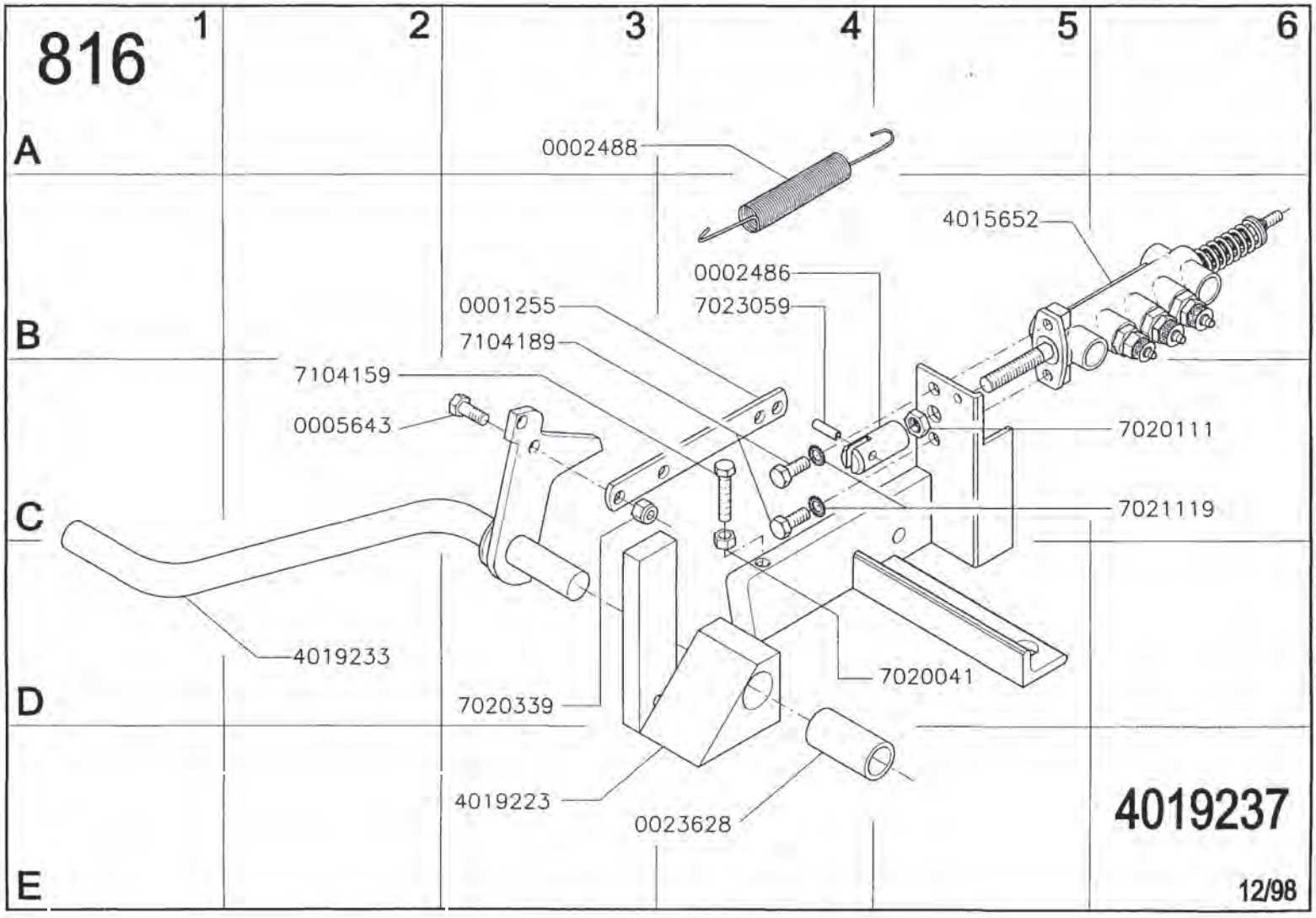

PARTS 4 EQUIPMENT

Visit us online to order parts for this machine:
https://parts4equipment.com/

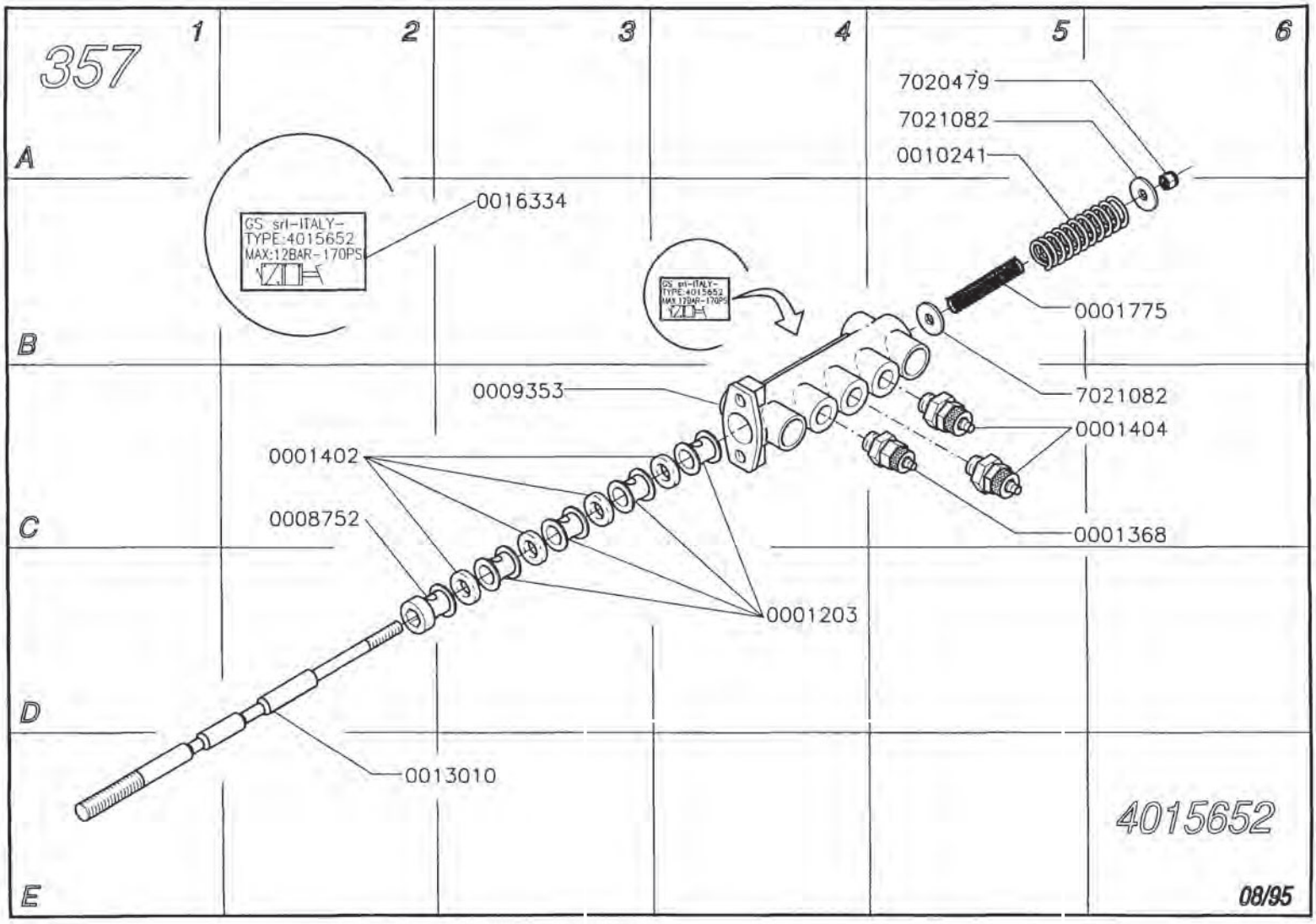

Visit us online to order parts for this machine:
https://parts4equipment.com/

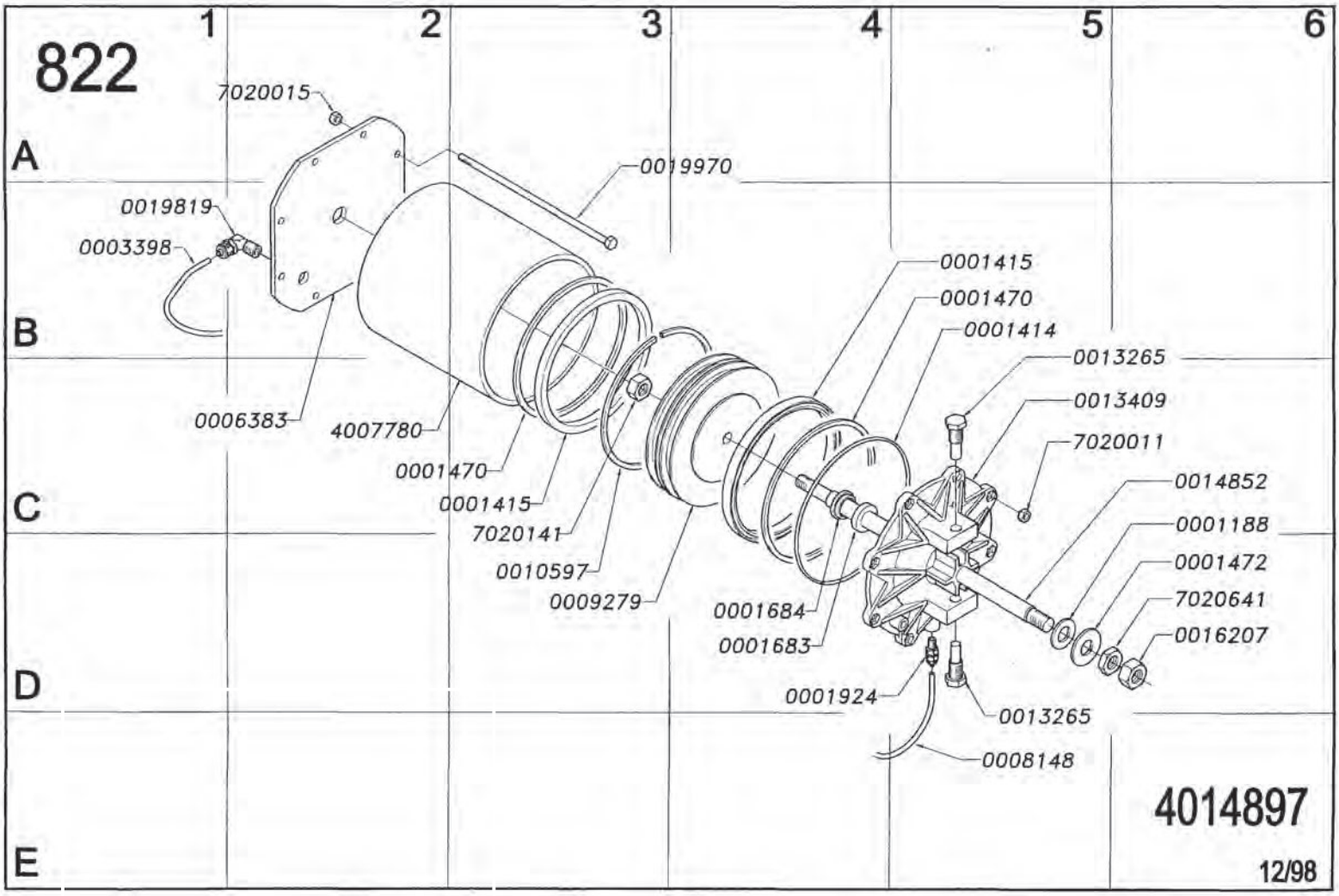

PARTS 4 EQUIPMENT

Visit us online to order parts for this machine:
https://parts4equipment.com/

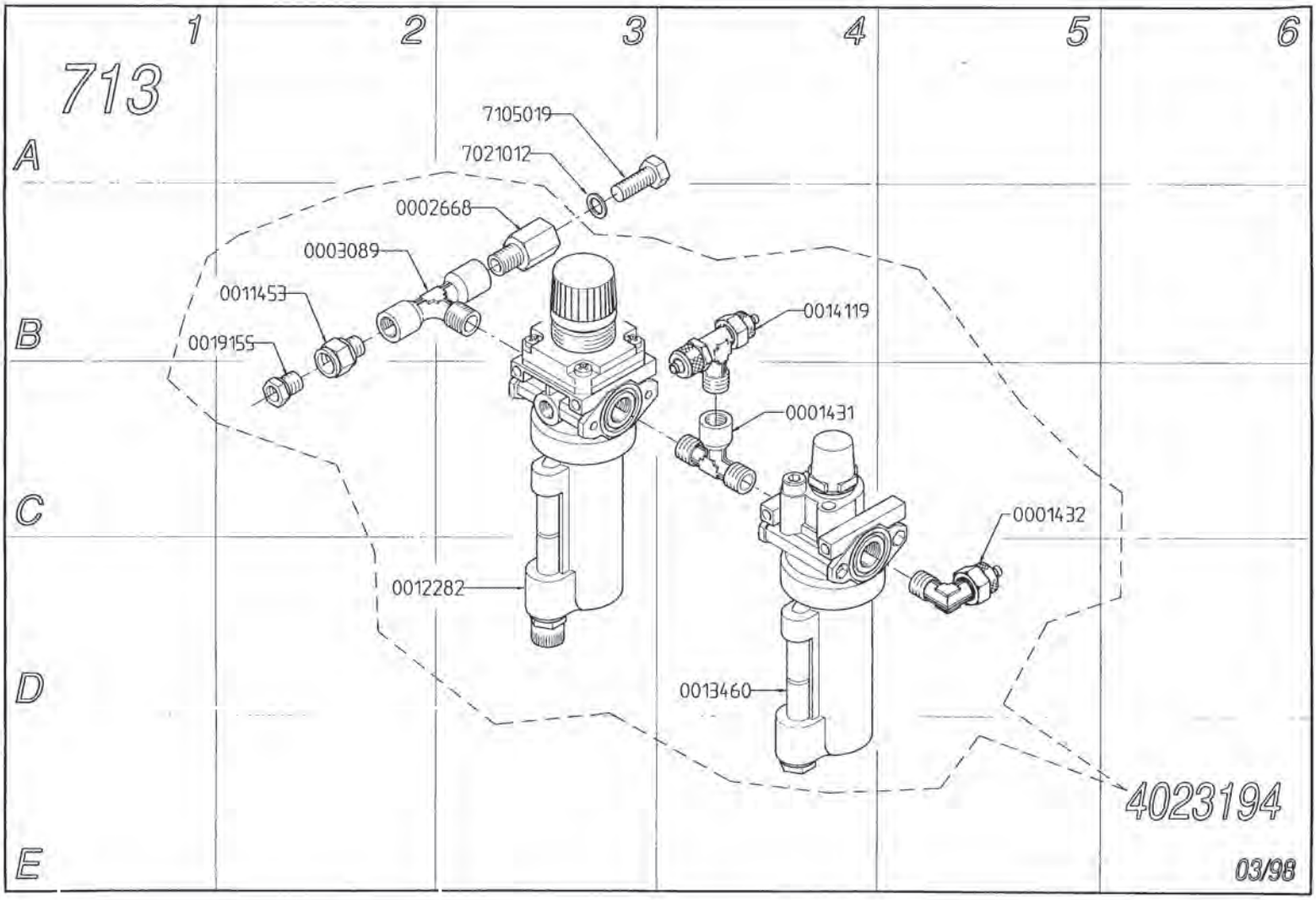

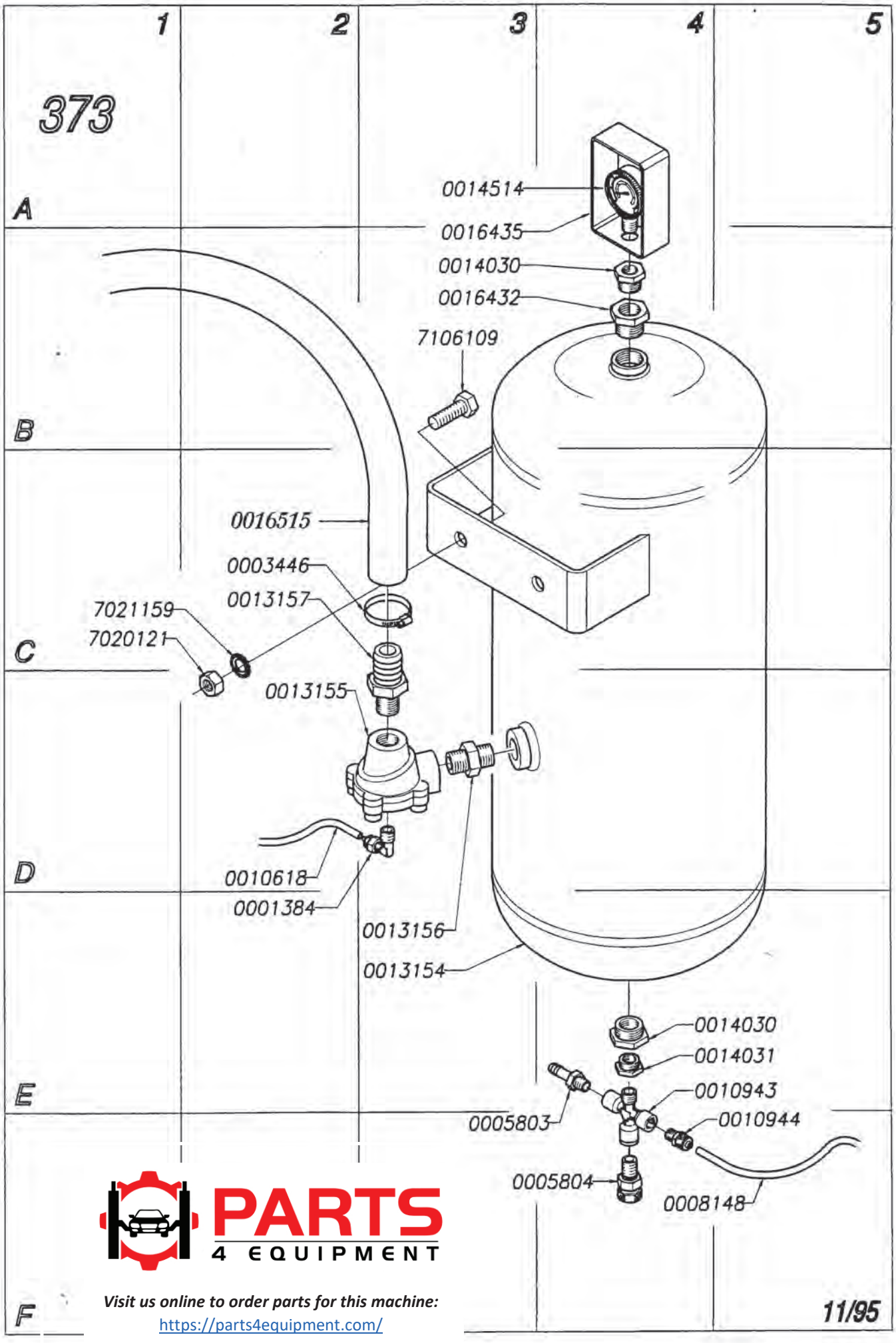

PARTS 4 EQUIPMENT

Visit us online to order parts for this machine:
https://parts4equipment.com/

11/95

PARTS 4 EQUIPMENT

Visit us online to order parts for this machine:
https://parts4equipment.com/

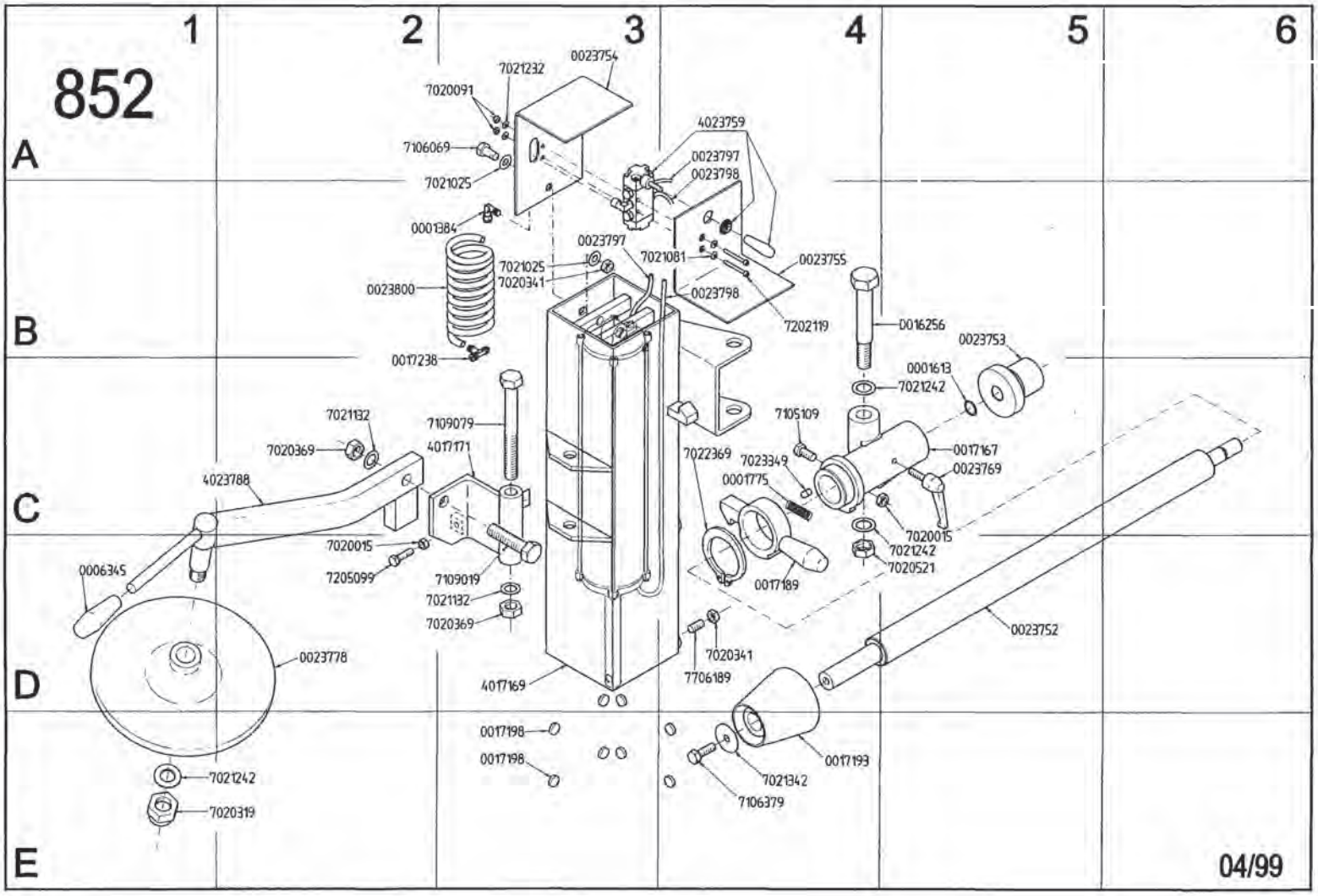

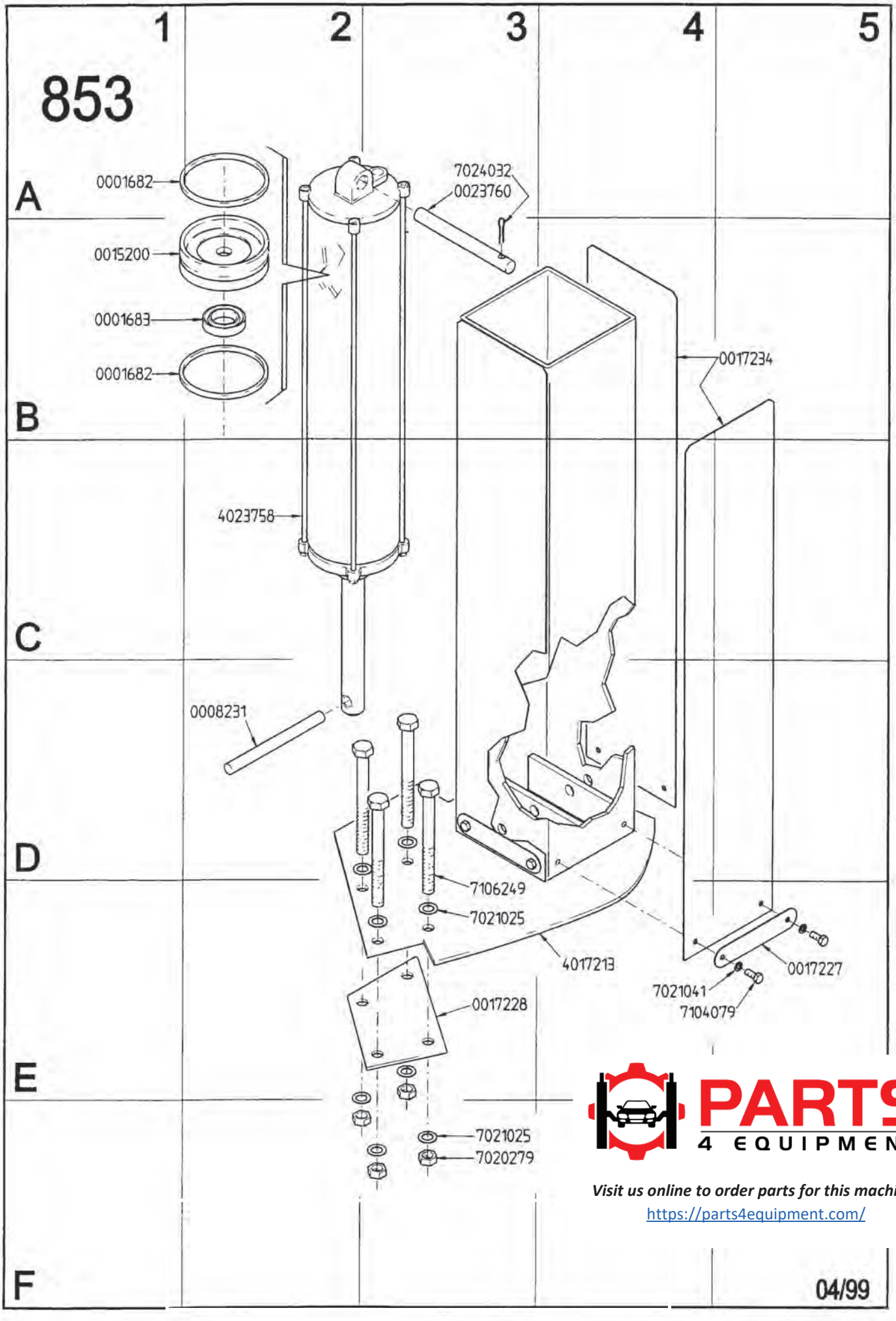

PARTS 4 EQUIPMENT

Visit us online to order parts for this machine:
https://parts4equipment.com/