Accu Industries, Inc.

PARTS 4 EQUIPMENT

Visit us online to order parts for this machine:
https://parts4equipment.com/

ACCU 3500

ELECTROPNEUMATIC TIRE CHANGER FOR CAR, LIGHT TRUCK AND MOTORCYCLE WHEELS

OPERATOR'S MANUAL
SPARE PARTS EXPLODED DRAWINGS

PARTS 4 EQUIPMENT

Visit us online to order parts for this machine:
https://parts4equipment.com/

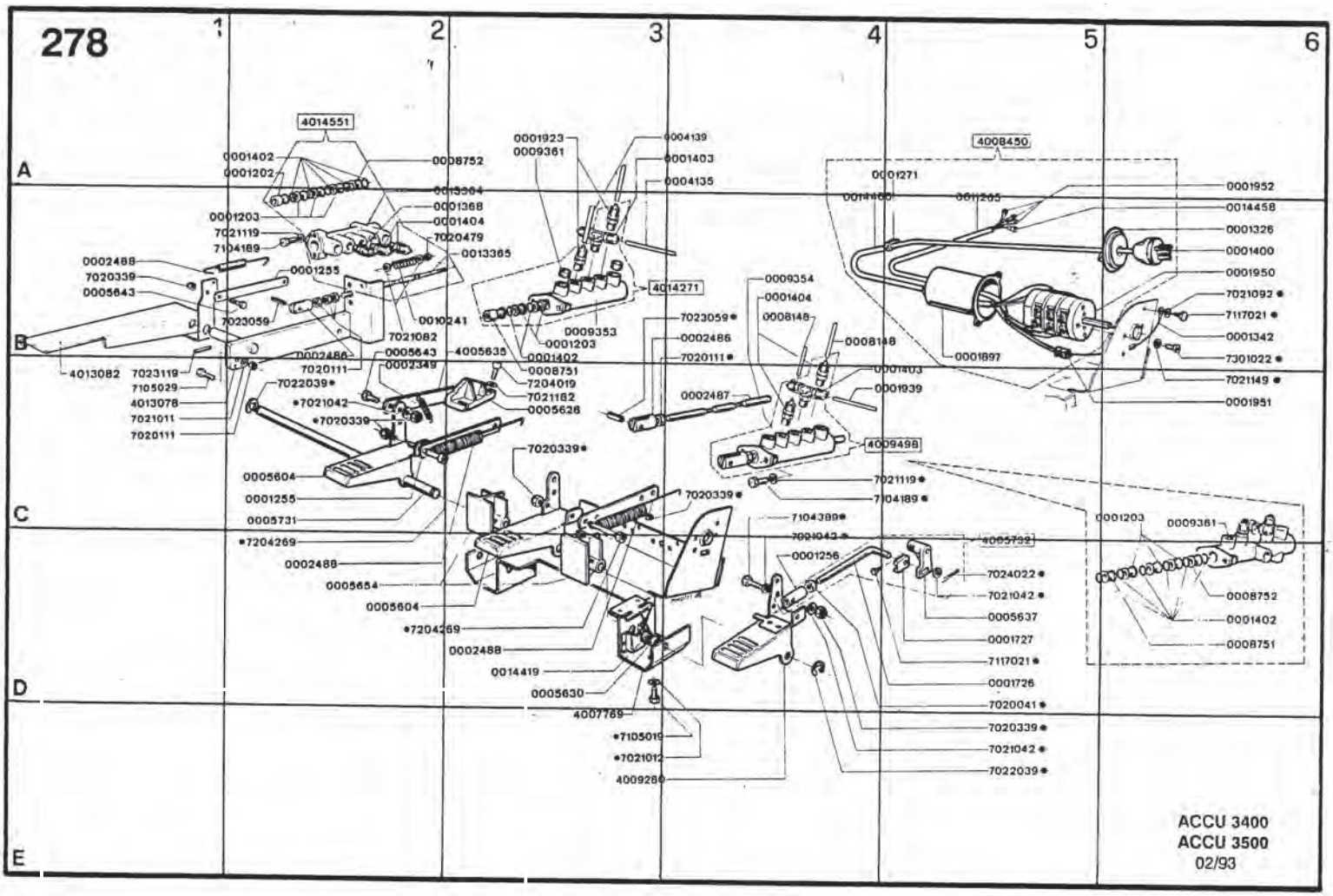

PARTS 4 EQUIPMENT

Visit us online to order parts for this machine:
https://parts4equipment.com/

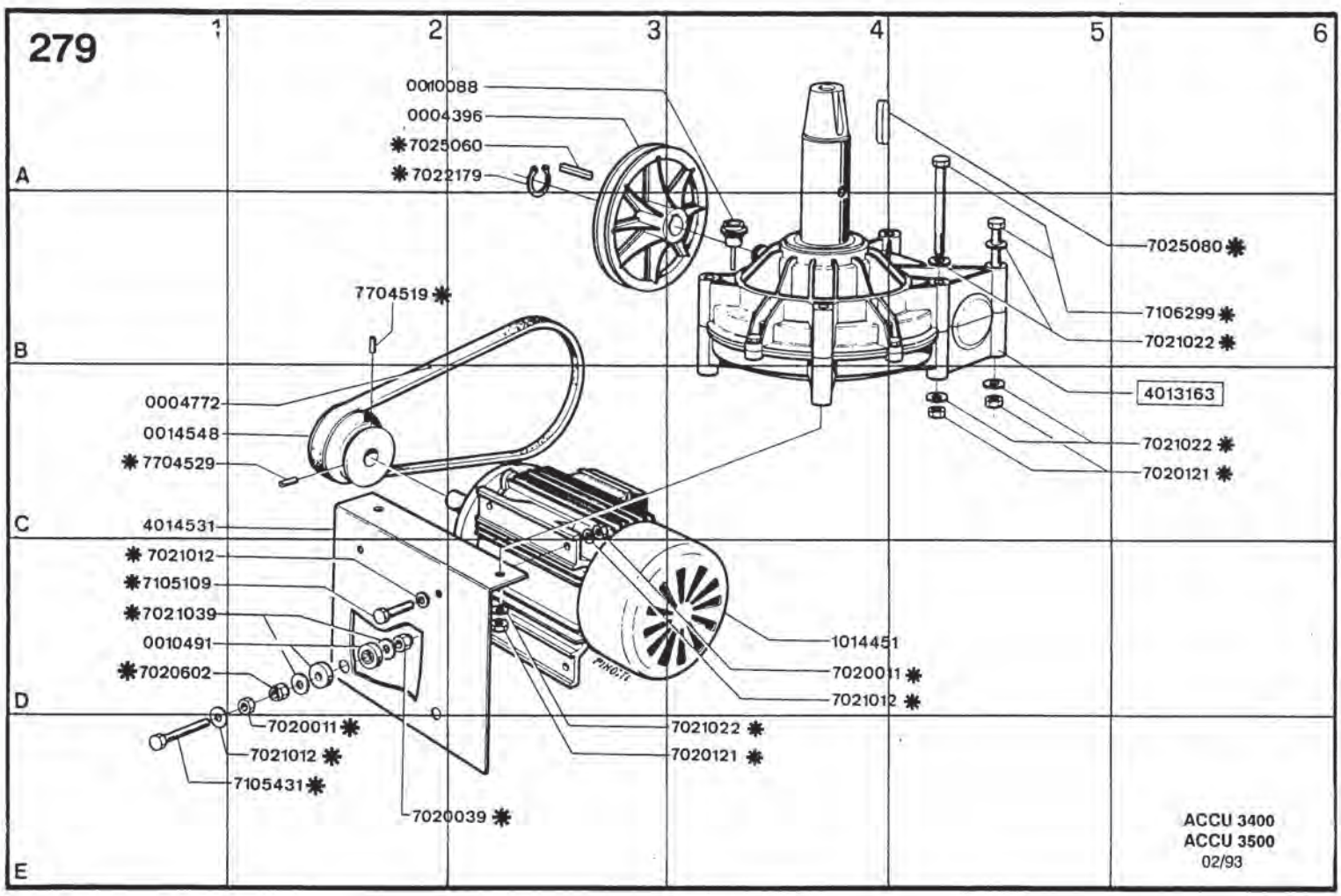

PARTS 4 EQUIPMENT

Visit us online to order parts for this machine:
https://parts4equipment.com/

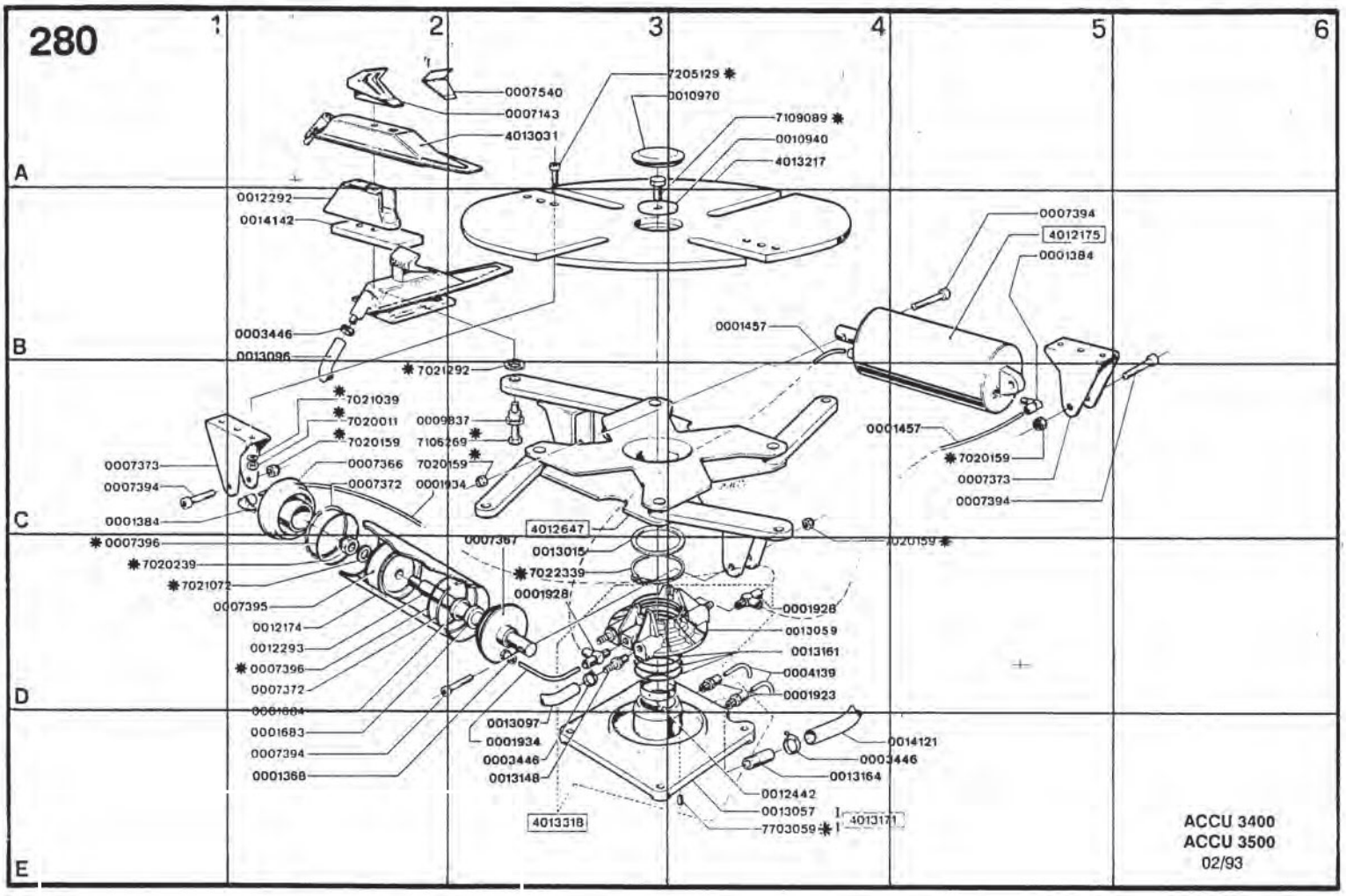

PARTS 4 EQUIPMENT

Visit us online to order parts for this machine:
https://parts4equipment.com/

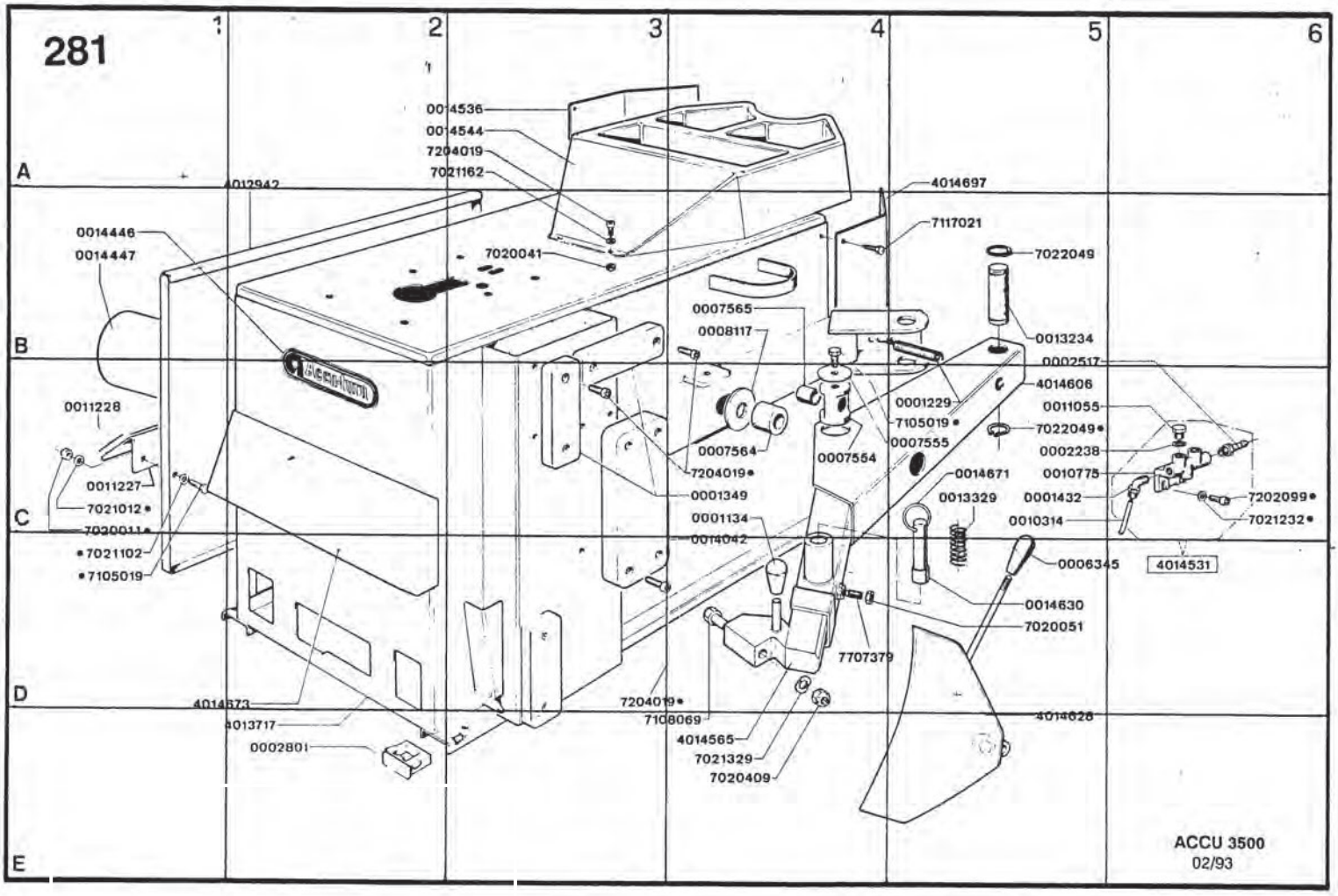

PARTS 4 EQUIPMENT

Visit us online to order parts for this machine:
https://parts4equipment.com/

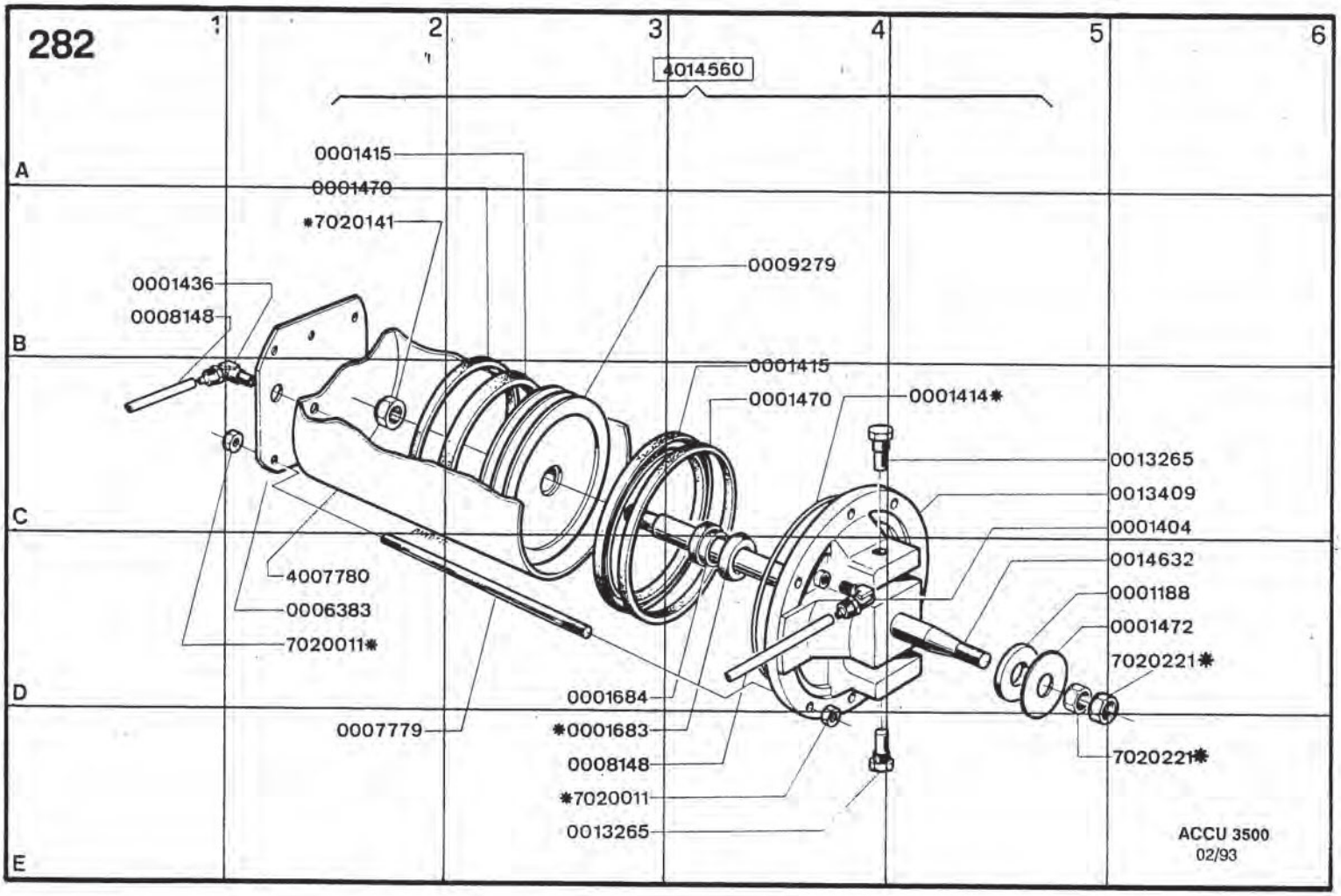

PARTS 4 EQUIPMENT
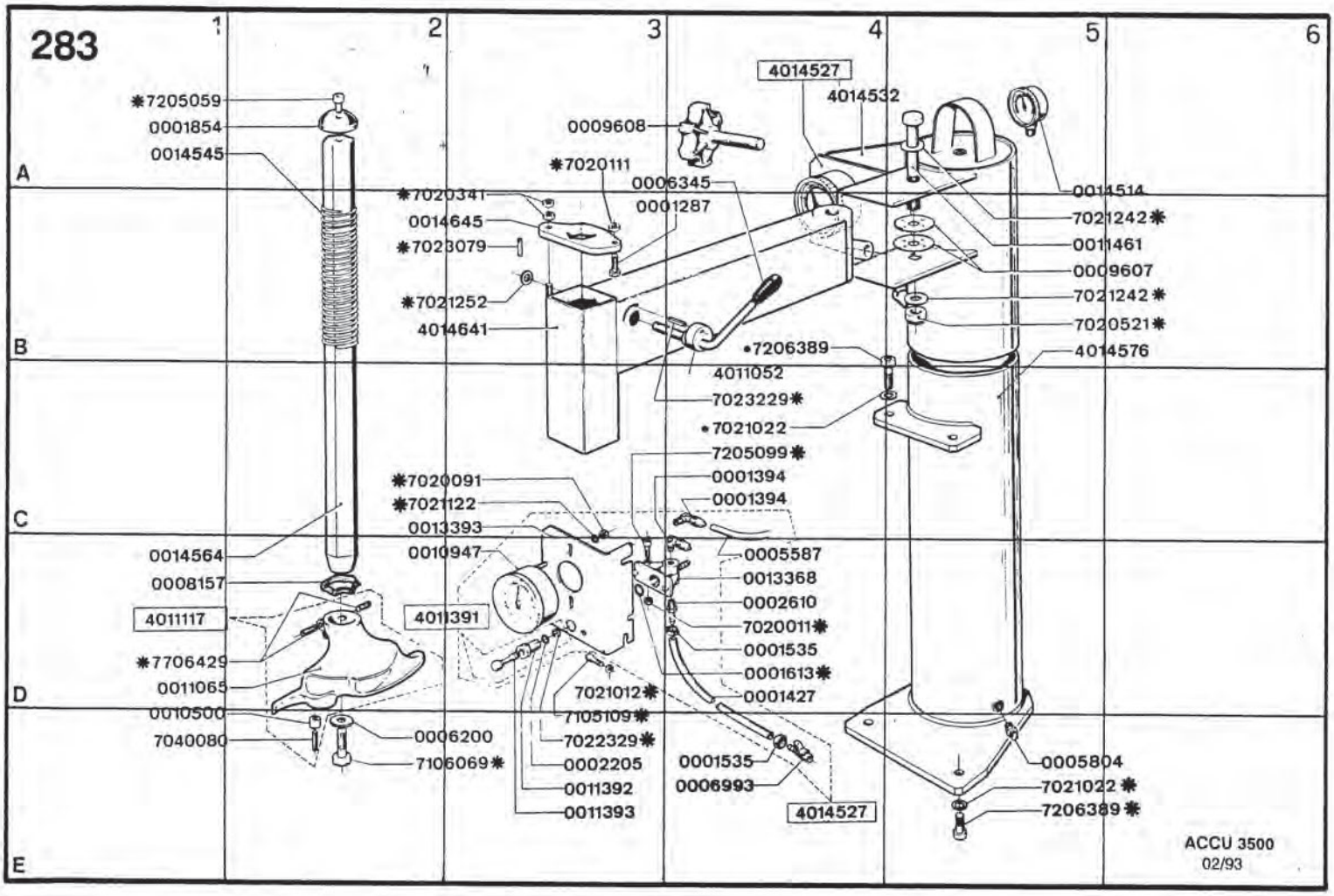
Visit us online to order parts for this machine:
https://parts4equipment.com/