BEN PEARSON

PARTS MANUAL - 12000SI

Visit us online to order parts for this machine:
https://parts4equipment.com/

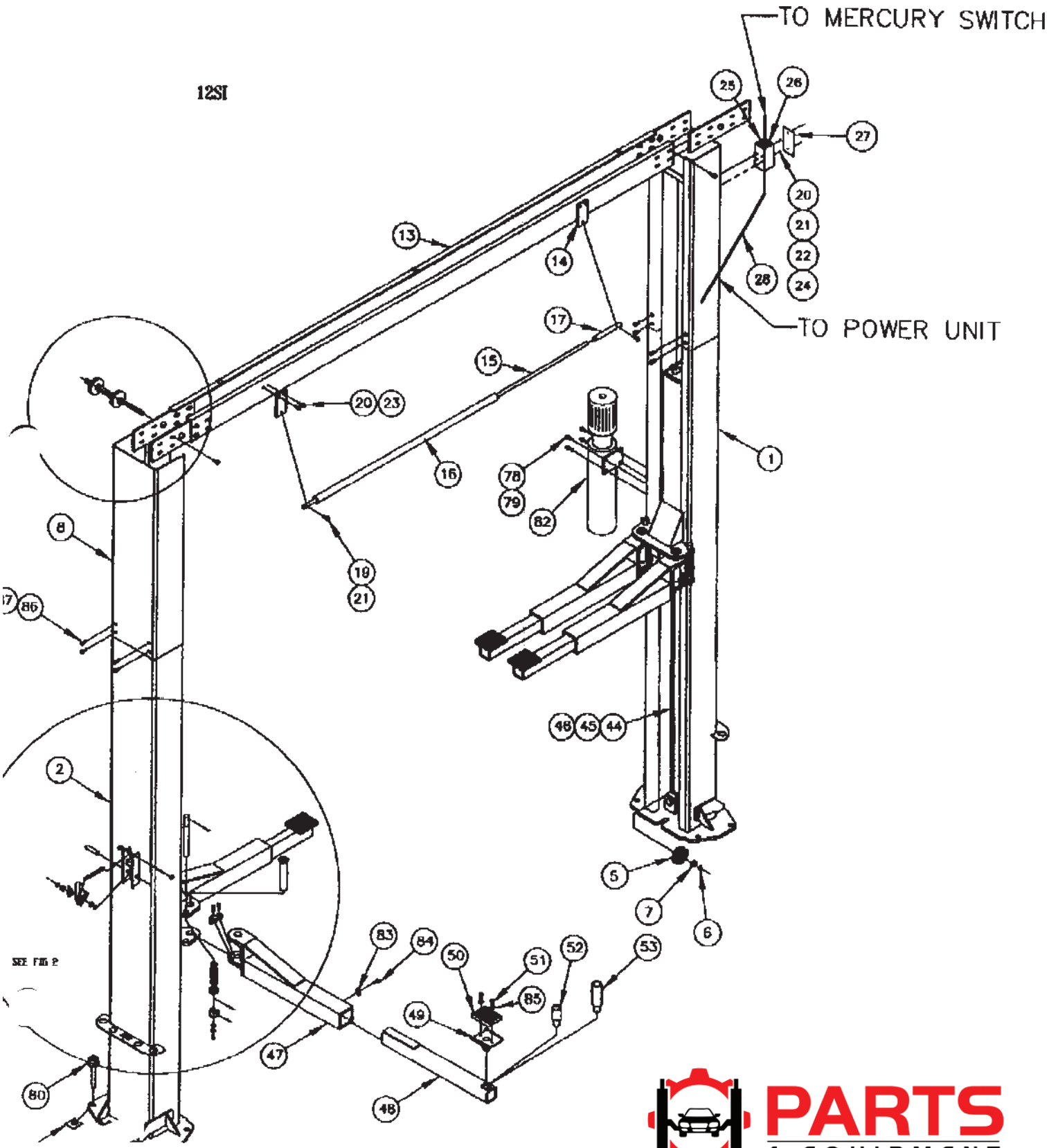

PARTS 4 EQUIPMENT

Visit us online to order parts for this machine:
https://parts4equipment.com/

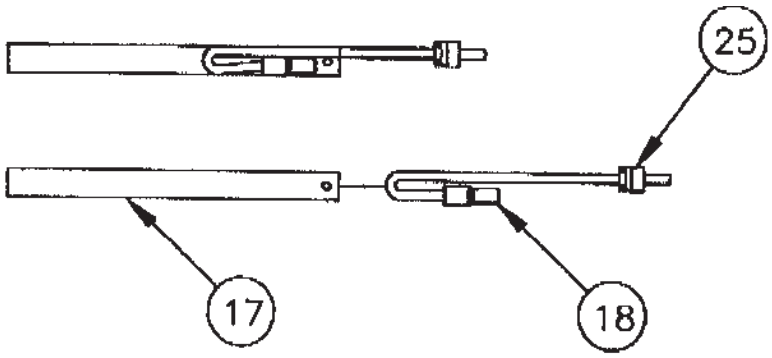

FIG #1

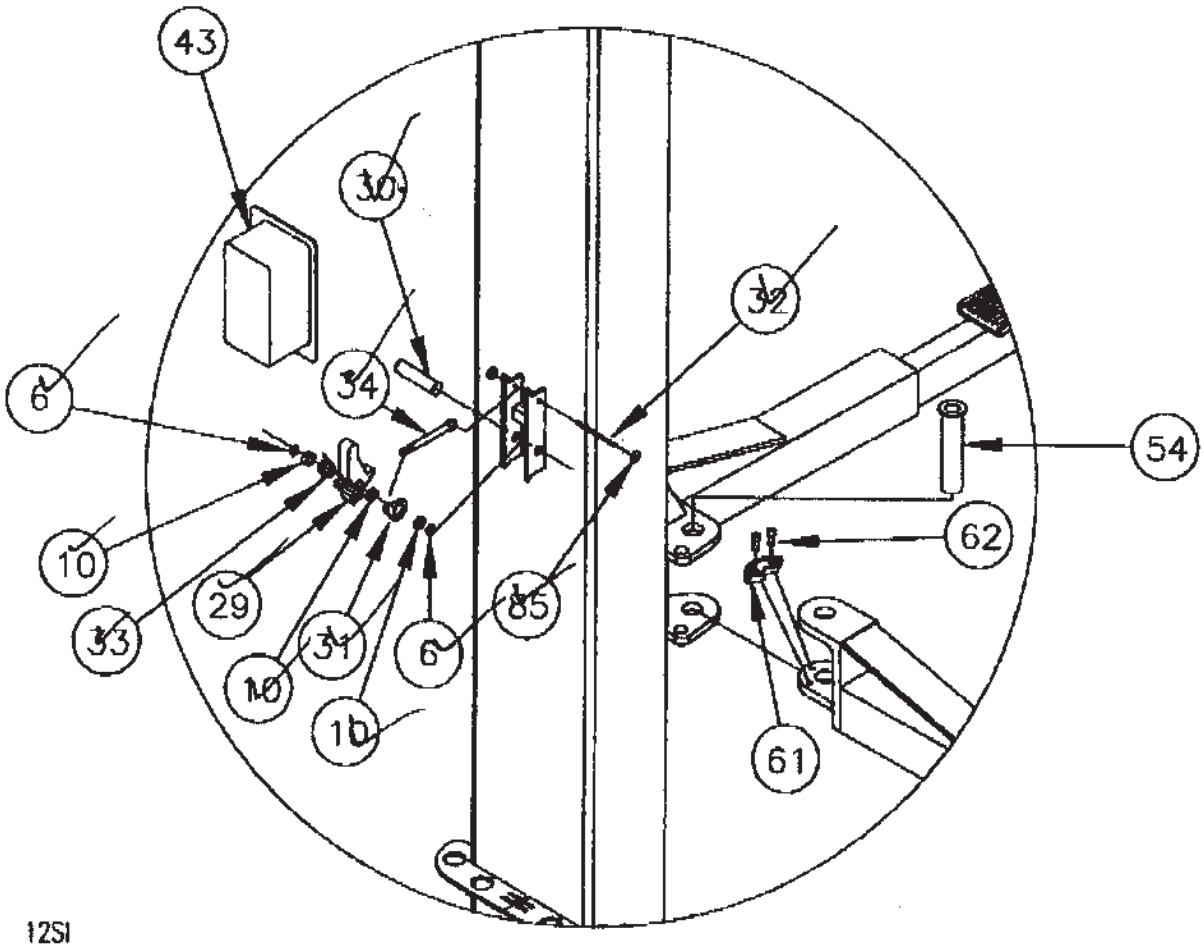

FIG #2

PARTS 4 EQUIPMENT

Visit us online to order parts for this machine:
https://parts4equipment.com/

PARTS 4 EQUIPMENT

Visit us online to order parts for this machine:
https://parts4equipment.com/

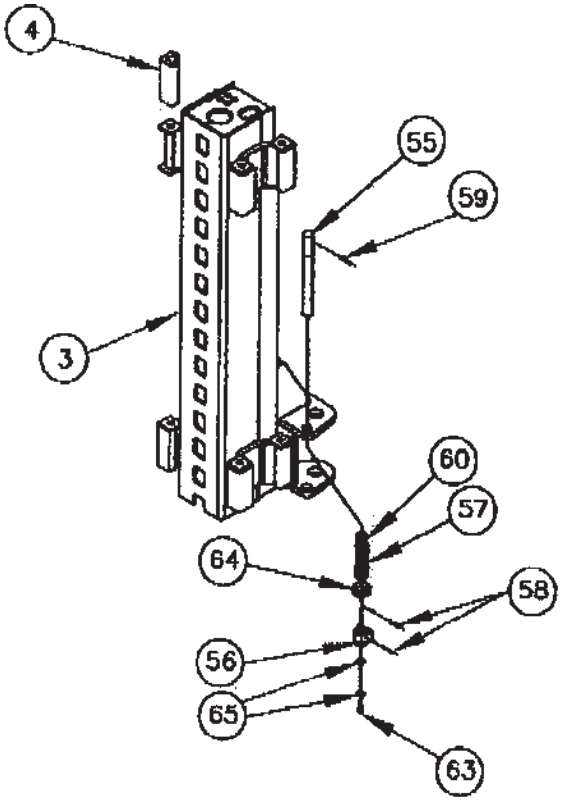

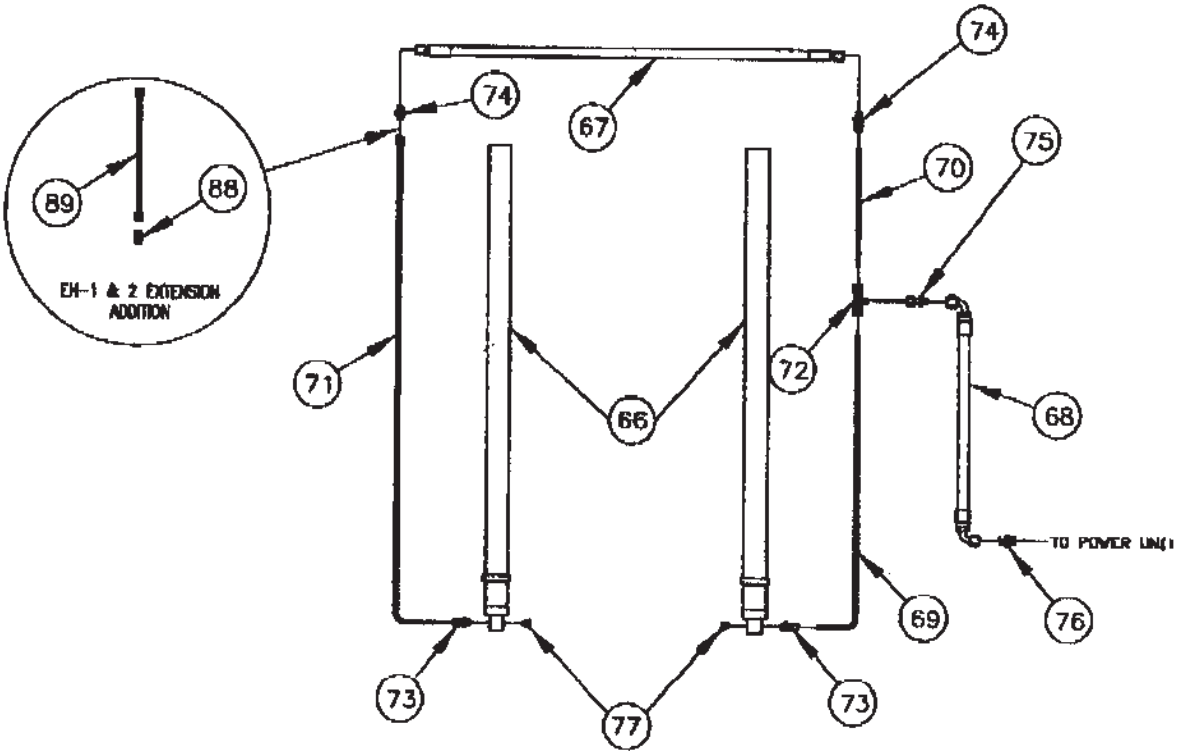

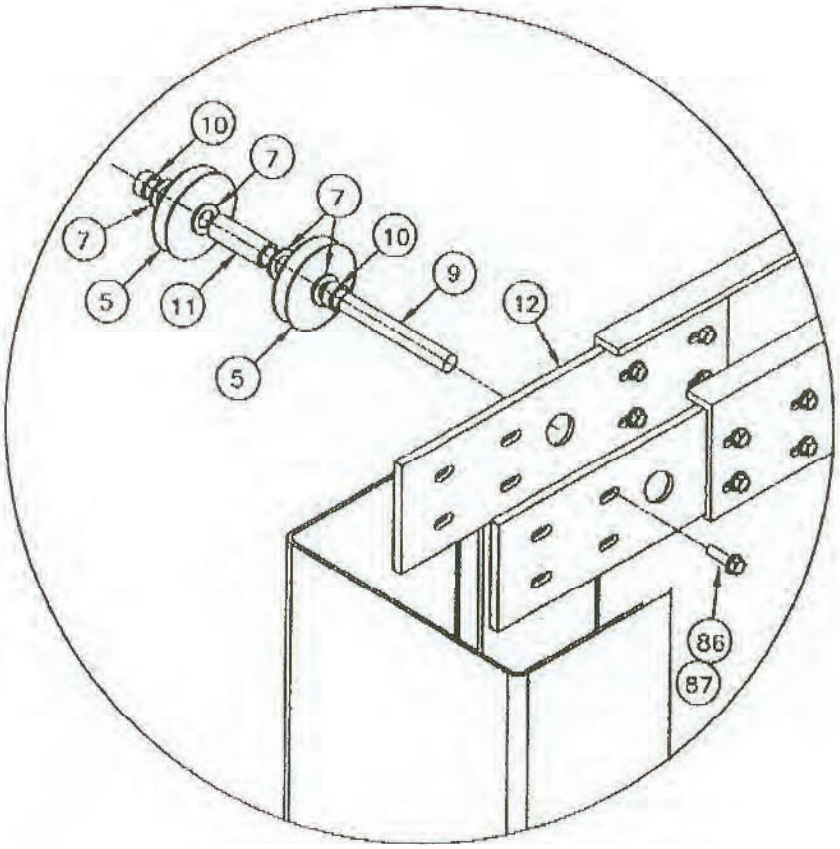

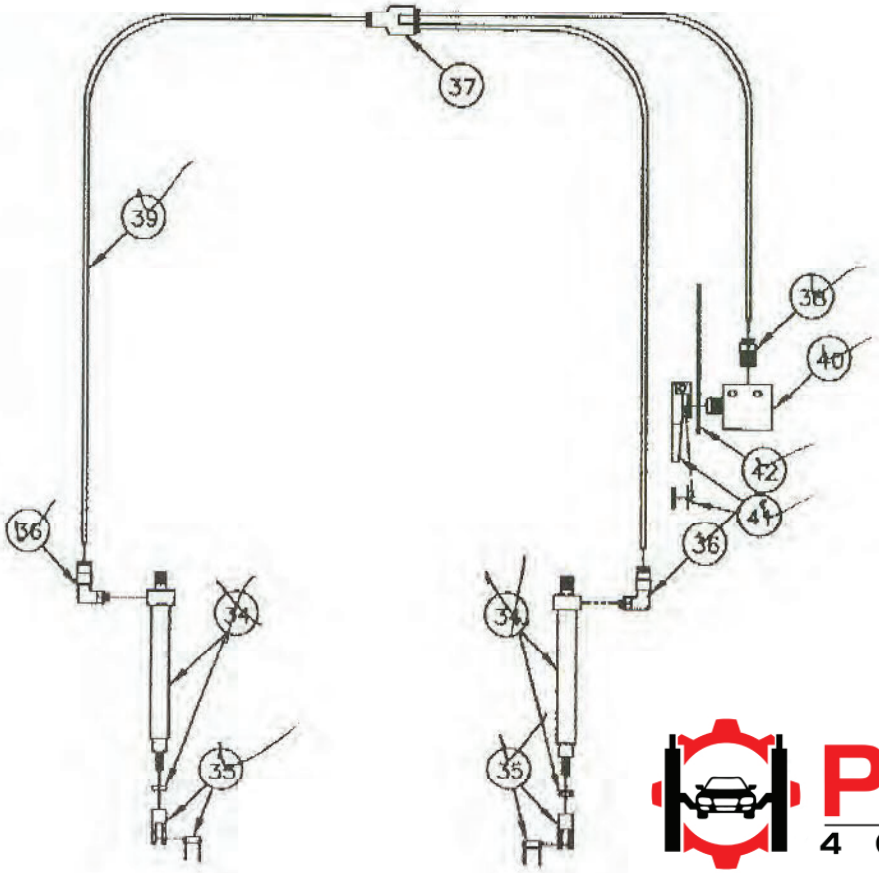

PARTS 4 EQUIPMENT

Visit us online to order parts for this machine:
https://parts4equipment.com/

04/02/02

	BASE MODEL	12SI		12SI-EH-1		12SI-EH-2	
	LIFT PART NUMBER	90075		90092		90093	
	OVERALL HEIGHT	13'-9"	QT	14' - 9"	QT	15' - 9"	QT
1	POST STRUCTURE - RH	91650	1	91650	1	91650	1
2	POST STRUCTURE - LH	91660	1	91660	1	91660	1
3	CARRIAGE STRUCTURE	91661	2	91661	2	91661	2
4	BEARING BLOCK	91564	8	91564	8	91564	8
5	SHEAVE	91665	6	91665	6	91665	6
6	SNAP RING 1" HEAVY DUTY	103029	2	103029	2	103029	2
7	FLATWASHER 1" SAE	100143	10	100143	10	100143	10
8	STRUCTURE - ADAPTER, OVERHEAD	91667	2	91987	2	91726	2
9	SHAFT - OVERHEAD	91672	2	91672	2	91672	2
10	SPACER - .31"	91673	10	91673	10	91673	10
11	SPACER - 1.90"	91674	2	91674	2	91674	2
12	END PLATE - OVERHEAD	91677	4	91677	4	91677	4
13	CROSSOVER CHANNEL	91676	1	91676	1	91676	1
14	BRACKET - SHUTOFF MOUNTING	91567	2	91567	2	91567	2
15	PIPE - SHUTOFF BAR	91568	1	91568	1	91568	1
16	CUSHION - SHUTOFF BAR	91577	1	91577	1	91577	1
17	HOLDER - SWITCH	91570	1	91570	1	91570	1
18	SWITCH - MERCURY OVERHEAD	91571	1	91571	1	91571	1
19	5/16 X 1-1/4 SHOULDER BOLT	101031	2	101031	2	101031	2
20	HHS 1/4 20 NC X 3/4	100207	6	100207	6	100207	6
21	HEX NUT 1/4-20NC	100131	8	100131	8	100131	8
22	1/4 EXT. TOOTH LOCK WASHER	100201	2	100201	2	100201	2
23	1/4 LOCK WASHER - MED.	100134	6	100134	6	100134	6
24	1/4 FLAT WASHER	100065	2	100065	2	100065	2
25	STRAIN RELIEF	103023	2	103023	2	103023	2
26	JUNCTION BOX	103027	1	103027	1	103027	1
27	COVER PLATE - JUNCTION BOX	103026	1	103026	1	103026	1
28	CORD	103028	1	103028	1	103028	1
#	SUPPORT CLAMP	61412	2	61412	2	61412	2
#	HFHSLC 5/16 X 3/4	100234	2	100234	2	100234	2
#	HFHSL NUT 5/16	100237	2	100237	2	100237	2
29	LATCH - 12000# ASSEMBLY	91678	2	91678	2	91678	2
30	PIN - PIVOT, LATCH	91680	2	91680	2	91680	2
31	LINK	91681	2	91681	2	91681	2
32	ROD - MOUNTING CYLINDER	91684	2	91684	2	91684	2
33	TORSION SPRING - CARRIAGE STOP	103016	2	103016	2	103016	2
34	CYLINDER - ACTUATING, LATCH	91685	2	91685	2	91685	2
35	CLEVIS - CYLINDER	91686	2	91686	2	91686	2
36	FITTING - AIR, ELBOW	105035	2	105035	2	105035	2
37	FITTING - AIR, UNION - Y	105036	1	105036	1	105036	1
38	FITTING - AIR, MALE CONNECTOR	105037	1	105037	1	105037	1
39	AIR HOSE 1/8"	50050	45	50050	45	50050	45
40	AIR VALVE	105038	1	105038	1	105038	1
41	ACTUATOR - AIR VALVE	105039	1	105039	1	105039	1
42	MOUNTING BRACKET	91688	1	91688	1	91688	1
43	LATCH COVER 12SI	91689	2	91689	2	91689	2
44	EQUALIZER CABLE	91690	2	91989	2	91771	2
45	FLATWASHER 5/8"	100155	4	100155	4	100155	4
46	HEX NUT 5/8-18NF	100192	8	100192	8	100192	8
47	ARM STRUCTURE	91691	4	91691	4	91691	4
48	ARM EXTENSION STRUCTURE	91696	4	91696	4	91696	4

PARTS 4 EQUIPMENT

Visit us online to order parts for this machine:
https://parts4equipment.com/

		BASE MODEL	12000SI		12000SI		12000SI	
		LIFT PART NUMBER	90075		90092		90093	
		OVERALL HEIGHT	13'-9"	QT	14' - 9"	QT	15' - 9"	QT
#		LIFT PAD ASSEMBLY	91555	4	91555	4	91555	4
	49	LIFT PAD STRUCTURE	91556	1	91556	1	91556	1
	50	PAD LIFT - BOLT ON	91559	1	91559	1	91559	1
	51	HEX SCREW 3/8-16NC X 3/4	100179	2	100179	2	100179	2
	83	FLATWASHER 3/8" SAE	100082	2	100082	2	100082	2
52		LIFT PAD EXTENSION 2-5/8"	91560	4	91560	4	91560	4
53		LIFT PAD EXTENSION 5"	91562	4	91562	4	91562	4
54		ARM PIN STRUCTURE	91701	4	91701	4	91701	4
55		SHAFT - ARM RESTRAINT	91704	4	91704	4	91704	4
56		GEAR - LOCKING	91582	4	91582	4	91582	4
57		SPRING - ACTUATING - ARM RESTRAINT	103017	4	103017	4	103017	4
58		ROLL PIN - 3/16 X 1-1/2	103009	8	103009	8	103009	8
59		ROLL PIN - 1/4 X 2-1/2	103018	4	103018	4	103018	4
60		1" SNAP RING	103019	4	103019	4	103019	4
61		GEAR - ARM RESTRAINT	91584	4	91584	4	91584	4
62		SOCKET HEAD CAP SCREW 3/8-16NC X 1"	101028	8	101028	8	101028	8
63		SOCKET HEAD CAP SCREW-5/16-18 X 3/4	101027	4	101027	4	101027	4
64		FLAT WASHER 1" SAE	100143	4	100143	4	100143	4
65		FLAT WASHER 5/16" SAE	100088	12	100088	12	100088	12
66		CYLINDER	91586	2	91586	2	91586	2
67		HYDRAULIC HOSE 3/8 x 225-1/2"	91706	1	91706	1	91706	1
68		HYDRAULIC HOSE 3/8 x 18"	91595	1	91595	1	91595	1
69		HYDRAULIC LINE 79-3/8"	91596	1	91596	1	91596	1
70		HYDRAULIC LINE 38-3/4"	91707	1	91707	1	91707	1
71		HYDRAULIC LINE 120-1/4"	91708	1	91708	1	91708	1
72		MALE BRANCH TEE	105022	1	105022	1	105022	1
73		CONNECTOR - STRIAGHT	105023	2	105023	2	105023	2
74		UNION ADAPTER	105024	2	105024	2	105024	2
75		FEMALE BULKHEAD CONNECTOR	105025	1	105025	1	105025	1
76		ADAPTER 9/16ORB X 9/16JIC	60544	1	60544	1	60544	1
77		PLUG 9/16 ORB	105026	2	105026	2	105026	2
78		HHFL SCR 5/16X18NCX3/4 GR. 5	100234	4	100234	4	100234	4
79		HH FL NUT 5/16 X 18NC	100237	4	100237	4	100237	4
80		ANCHOR BOLT 3/4 X 7"	95070	12	95070	12	95070	12
81		SHIMS	95001	24	95001	24	95001	24
82		POWER UNIT - O/H 1PHASE 220V	95106	1	95106	1	95106	1
#		RELIEF VALVE - KRV21	105029	1	105029	1	105029	1
83		FLATWASHER 3/8" SAE	100082	4	100082	4	100082	4
84		3/8 X 3/4 SELF TAPPING SCREW	101025	4	101025	4	101025	4
85		PUSH ON FASTENER	103030	4	103030	4	103030	4
86		HFHSL SCREW 3/8-16NC X 1"	100238	48	100238	48	100238	48
87		HHFHSL NUT 3/8-16NC	100239	48	100239	48	100239	48
88		UNION TUBE FITTING			105032	2	10532	2
89		HYDRAULIC TUBE EXTENSION			91639	2	91638	2
#		ADHESIVE 4-WAY CABLE TIE	103020	4	103020	4	103020	4
#		SERIAL NAME PLATE	95056	1	95056	1	95056	1
#		BEN PEARSON DECAL 5X36 MYLAR	95005	2	95005	2	95005	2
#		PB/800 DECAL 2X5 MYLAR	95006	1	95006	1	95006	1
#		CAUTION DECAL 12000 LB	95008	2	95008	2	95008	2
#		ETL DECAL	95045	1	95045	1	95045	1
#		ALI UNIFORM WARNING LABELS	95046	1	95046	1	95046	1
#		ALI SAFETY REQUIREMENTS FOR OPERATION	95047	1	95047	1	95047	1
#		ALI LIFTING POINT QUICK REF.	95048	1	95048	1	95048	1
#		LIFTING IT RIGHT MANUAL	95049	1	95049	1	95049	1
#		ALI SAFETY TIPS CARD	95062	1	95062	1	95062	1
#		BLUE TOUCH-UP PAINT	103007	1	103007	1	103007	1
#		YELLOW TOUCH-UP PAINT	103008	1	103008	1	103008	1
#		WARRANTY CARD	83423	1	83423	1	83423	1
#		MANUAL	95068	1	95068	1	95068	1
#		GREASE 2-EP 1# CAN	95116	1	95116	1	95116	1
#		NOT SHOWN						

PARTS 4 EQUIPMENT

Visit us online to order parts for this machine:
https://parts4equipment.com/